Honeywell

OP-333774

UDC 3000
Universal Digital Controller
Product Manual

51-52-25-07E
10/95

Copyright, Notices, and Trademarks

Printed in U.S.A. – © Copyright 1995by Honeywell Inc.

Rev. E

While this information is presented in good faith and believed to be accurate, Honeywell disclaims the implied warranties of merchantability and fitness for a particular purpose and makes no express warranties except as may be stated in its written agreement with and for its customer.

In no event is Honeywell liable to anyone for any indirect, special or consequential damages. The information and specifications in this document are subject to change without notice.

This document was prepared using Information Mapping® methodologies and formatting principles.

UDC 3000 is a trademark of Honeywell Inc.

Information Mapping is a trademark of Information Mapping Inc.

Symbol Definitions

This CAUTION symbol on the equipment refers the user to the Product Manual for additional information. This symbol appears next to required information in the manual.

WARNING, risk of electric shock. This symbol warns the user of a potential shock hazard where HAZARDOUS LIVE voltages greater than 30 Vrms, 42.4 Vpeak, or 60 Vdc may be accessible.

Protective earth terminal. Provided for connection of the protective earth (green or green/yellow) supply system conductor.

Honeywell
Industrial Automation and Control
Automation College
1100 Virginia Drive
Fort Washington, Pa 19034

Group Prompt	Function Prompt	Selection or Range of Setting
OPTIONS (continued)	DIG1 COM	DISABL PID2 TO DIR TO SP2 DIG AT
	DIG IN2	Same as DIG IN1
	DIG3 COM	Same as DIG1 COM
Com	Com STATE	DMCS RS422/485 DISABL
	Com ADDR	1 to 99
	SHEDTIME	0 to 255 (sample periods (0 = no shed))
	PARITY*	ODD EVEN
	BAUD*	300 600 1200 2400 4800 9600 19200
	DUPLEX*	HALF = Half duplex FULL = Full duplex
	TX DELAY	1 to 200 milliseconds
	LOOPBACK	ENABLE DISABL
	SHEDMODE**	LAST = Same mode as before shed TO MAN = To manual (hold, output last) FSAFE = To manual mode, failsafe output TO AUTO = To automatic mode
	SHED SP**	TO LSP = To local SP item TO DSP = To last consumed com port
	UNITS	PERCENT = Percent ENG = Engineering Units
AL SPEC	A1S1 VAL A1S2 VAL A2S1 VAL A2S2 VAL	Value in Engineering Units (For SP Programming, Value = Segment Number)
	A1S1 TYPE A1S2 TYPE A2S1 TYPE A2S2 TYPE	NONE = No alarm IN1 = Input 1 IN2 = Input 2 PV = Process variable DEV = Deviation OUTPUT = Output SHED = Communications Shed EV ON = Event ON (SP Programming) EV OFF = Event OFF (SP Programming) MANUAL = Alarm on manual mode
	A1S1 (H L) (EV) A1S2 (H L) (EV) A2S1 (H L) (EV) A2S2 (H L) (EV)	HI = High Alarm (H L) LO = Low Alarm (H L) BEGIN = Beginning of segment (SP Programming) (EV) END = End of segment (SP Programming) (EV)
	AL HYST	0.0 to 100% of span or full scale
CALIB		USED FOR FIELD CALIBRATION

*RS422 only
**In DMCS only

Group Prompt	Function Prompt	Selection or Range of Setting
STATUS	VERSION	Software Version Number
	FAILSAFE	Read only "YES" or "NO"
	RAM TEST CONF TEST CAL TEST FACT CRC	Read Only "PASS" or "FAIL"
SP RAMP (Set Point Ramp/Soak Programming)	SP PROG	ENABLE (Must enable to allow program values below) DISABL
	START SEG	1 to 11
	END SEG	2 to 12 (must be Soak Segment—even number)
	RECYCLES	0 to 99
	SOAK DEV	0 to 99 (%)
	SEG1 RAMP	0 to 99 hrs:59 minutes or 0 to 999 degrees/minute
	SEG2 SP	Within SP range limits in Engineering Units
	SEG2 TIME	0 to 99 hrs:59 minutes
	SEG3 RAMP	0 to 99 hrs:59 minutes or 0 to 999 degrees/minute
	SEG4 SP	Within SP range limits in Engineering Units
	SEG4 TIME	0 to 99 hrs:59 minutes
	SEG5 RAMP	0 to 99 hrs:59 minutes or 0 to 999 degrees/minute
	SEG6 SP	Within SP range limits in Engineering Units
	SEG6 TIME	0 to 99 hrs:59 minutes
	SEG7 RAMP	0 to 99 hrs:59 minutes or 0 to 999 degrees/minute
	SEG8 SP	Within SP range limits in Engineering Units
	SEG8 TIME	0 to 99 hrs:59 minutes
	SEG9 RAMP	0 to 99 hrs:59 minutes or 0 to 999 degrees/minute
	SEG10 SP	Within SP range limits in Engineering Units
	SEG10 TIME	0 to 99 hrs:59 minutes
	SEG11 RAMP	0 to 99 hrs:59 minutes or 0 to 999 degrees/minute
	SEG12 SP	Within SP range limits in Engineering Units
	SEG12 TIME	0 to 99 hrs:59 minutes
	STATE	DISABL HOLD
	PROG END	LAST SP = Hold at the last SP point in the program FSAFE = Medium Block, Failsafe Output
	RAMP UNIT	TIME = Hours:Minutes RATE = Degrees/Minute

Honeywell

Industrial Automation and Control
Honeywell Inc.
1100 Virginia Drive
Fort Washington, PA 19034

Helping You Control Your World

Honeywell

UDC 3000
Universal Digital Controller

Configuration Prompts

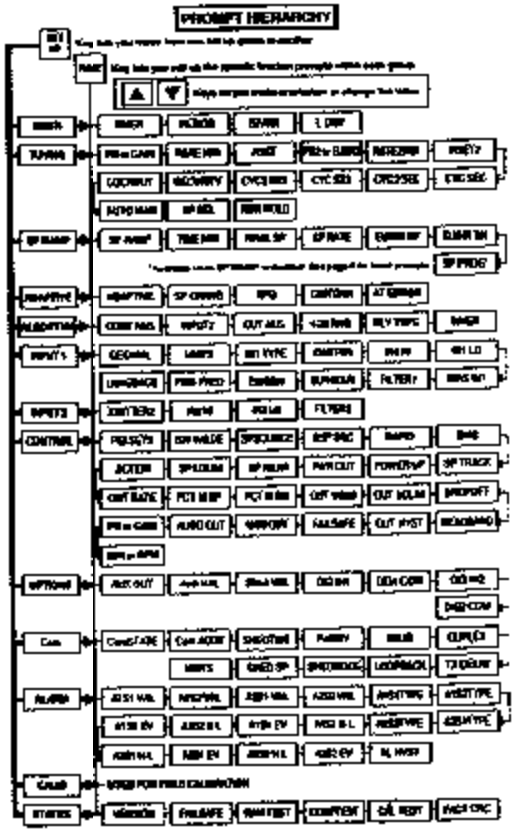

Printed in U.S.A. © Copyright 1995 by Honeywell Inc.

Group Prompt	Function Prompt	Selection or Range of Setting
TIMER	TmEn	ENABLE (allows Timer Action) DISABLE
	PERIOD	0:00 to 99:59 (Days:Minutes)
	START	KEY (Timer starts from keypress) AL 2 (Timer starts from Alarm 2)
	L Dsbl	TI FREM (time remaining) E time (elapsed time)
TUNING	PROP BAND or GAIN	0.1 to 999.9%
	RATE MIN	0.00 to 10.00 minutes
	RSET MIN or RSET RPM	0.02 to 50.00
	MAN RSET	−100 to +100 (%OUTPUT)
	PROP BAND or GAIN 2	0.1 to 999.9%
	RATE MIN	0 to 10.00 minutes
	RSET MIN or RSET RPM	0.02 to 50.00
	CYC SEC	1 to 120 seconds
	CYC2 SEC	1 to 120 seconds
	CYC SEC	1 to 120 seconds (LB dec. incremental)
	CYC2 SEC	1 to 120 seconds (LB dec. incremental)
	SQUARITY	1 to 4000
	LOSCOUT	NONE = No Lockout CALIB = Calibration locked out −CONF = Tuning, SP Prog, and Access are Read/Only; all others (plus Read only) +WRIT = Tuning and Set Point Prog are Read/Write only; all others cannot be viewed MAX = Tuning and Set Point Prog permanently are available for Read only
	AUTO MAN	ENABLE (allows Manual key lockout) DISABL
	SP SEL	ENABLE (allows Set Point Select key lockout) DISABL
	RUN HOLD	ENABLE (allows Run/Hold key lockout) DISABL
SP RAMP	SPRAMP	ENABLE (allows single set point ramp programs) DISABL (must be disabled to permit "SP PROG" Set Point Ramp/Soak Programming)
	TIME MIN	0 to 255 minutes
	FINAL SP	Within the Set Point Limits
	SP RATE	ENABLE (Set Point Rate selection) DISABL
	EUHR SP	0 to 9999 eu units per hour
	EUHR SP2	0 to 9999 eu units per hour
	SP PROG	ENABLE (allows prog-of for programs) DISABL
ADAPTIVE	ADAPTIVE	DISABL SP only
	SP CHANGE	5 to 10% Span
	HPO	0.10 to 10.00 (Process Gain)
	CRITERIA	NORMAL—Critically damping FAST—Less than 0.5% overshoot
	ATERROR	(READ Only)

Group Prompt	Function Prompt	Selection or Range of Setting
ALGORITHMS	CONT ALG	ON-OFF PID A PID B PD+MR = PD with Manual Reset 3PSTEP = Three Position Step
	INPUT 2	ENABLE DISABL
	OUT ALG	TIME = Relay Simplex CURRENT = Current Simplex POSITN = Passive Proportional Simplex TIME D = Relay Duplex CUR D = Current Duplex CUR T1 = Current/Relay Duplex (relay = Heat) T1 CUR = Current/Relay Duplex (relay = Cool)
	4-20 RNG	20 PCT = Current Output Range (Split) 100 PCT = Current Output Range (Full)
	RLY TYPE	MECHAN = Electro-mechanical relay SOL ST = Solid state relay
	TIMER	ENABLE (Timer group) DISABLE
INPUT 1	DECIMAL	XXXX = No decimal places XXX.X = One decimal place XX.XX = Two decimal places
	UNITS	DEG F = °Fahrenheit DEG C = °Celsius NONE
	INI TYPE	See Upper Display Prompts to select sensor type
	LIMITER	Applicable for Linear input Ranges only. See Upper Display prompts to make selection.
	IN1 HI	−9999 to 9999 (linear inputs only)
	IN1 LO	−9999 to 9999 (linear inputs only)
	IMAS IN1	−999.9 to 9999
	FILTER 1	0 to 120 seconds
	BURNOUT	NONE = No burnout UP = Upscale burnout DOWN = Downscale burnout
	EMISSIV	0.01 to 1.00
	PWR FREQ	60 Hz 50 Hz
	LANGUAGE	ENGLIS FRENCH GERMAN SPANIS ITALIAN
INPUT 2	LIMITER	Applicable for Linear inputs only. See Upper Display Prompts.
	IN2 HI	−999.9 to 9999
	IN2 LO	−999.9 to 9999
	FILTER 2	0 to 120 seconds
CONTROL	PID SETS	1 ONLY = One set SPETED = Two sets, keyboard selectable SPV SW = Two sets, PV automatic switchover ZSP SW = Two sets, SP automatic switchover
	SSP VALUE	Value in Engineering Units
	SP SOURCE	LOCAL = Local set point REMOTE = Two local set points
	REP SRC	NONE = Not Remote SP IN2 = Input 2 is Remote SP
	AUTO	−20.00 to 20.00
	BIAS	−9999 to 9999

Group Prompt	Function Prompt	Selection or Range of Setting
CONTROL (continued)	SP TRACK	NONE = No tracking PV = Local set point will track the PV when in manual mode RSP = Local set point will track remote set point when in auto mode
	POWER UP	MANUAL = Manual, local set point A LSP = Automatic, local set point A RSP = Automatic remote set point AM SP = Last mode, last local set point AM LSP = Last mode, last local set point
	SP HI LIM	0 to 100% of span in Engineering Units
	SP LO LIM	0 to 100% of span in Engineering Units
	ACTION	DIRECT (REVERS Output) REVERSE (DIRECT output)
	OUT RATE	ENABLE (output change rate) DISABL
	PCT MUP	0 to 9999%/minute
	PCT MDN	0 to 9999%/minute
	OUTHI LIM	−5.0 to +105.0% of output
	OUTLO LIM	−5.0 to +105.0% of output
	DROPOFF	−5.0 to +105.0% of output
	DEADBAND	Time proportional (proportional display) = −5.0 to 25.0% Position (proportional or 3 POSITION Step) = 0.0 to 4.0%
	OUT HTST	0.0 to 3.0% of PV span
	FAILSAFE	Within the range of output limits.
	MAN OUT	0.0 to 100.0%
	AUTO OUT	0.0 to 100.0%
	PB or GAIN	PB-PCT = Proportional band in Percent GAIN = Gain
	MAN or RPM	MAN = Manual mode RPM = Reset in rpm
OPTIONS	AUX OUT	DISABL = No auxiliary output IN1 = Input 1 IN2 = Input 2 PV = Process variable DEV = Deviation OUTPUT = Output SP = Set point LSP1 = Local Setpoint One
	4mA VAL	Low scale value within the range of the selected variable to represent 4 mA.
	20mA VAL	High scale value within the range of the selected variable to represent 20 mA.
	DIG IN1	NONE TO MAN = To manual TO LSP = To local set point TO SP2 = To set point two TO DIR = To direct action TO HOLD = To hold set point comp TO PID2 = Select PID2 PV2 IN = PV = Input 2 TO RMP = Start SP program TO RESP = Resume SP program STOP = Complete reset action TO MAN FS = To manual mode, failsafe output TO LOCK = Disable all keys TO A OUT = To Aux Out output value TIMER = Start timer AM STA = To Alarm Status

About This Publication

How this manual is organized

This Product Manual is divided into 12 sections numbered 1 through 12. These sections contain all the information you need to configure, operate, monitor, and troubleshoot your controller.
To find information quickly, use the comprehensive Table of Contents in the front of the manual and the Index located in the back of the manual.

Warranty

The device described herein has been manufactured and tested for correct operation and is warranted as follows:

The UDC 3000 Universal Digital Controller carries a two year warranty. This warranty includes immediate technical assistance via a toll free telephone number and complete replacement of the controller, if necessary.

Technical Assistance

If you encounter a problem with your UDC 3000 controller, review all the configuration data under the Set-up groups to verify that your selections are consistent with your application; i.e. Inputs, Outputs, Alarms, Limits, etc. If the problem persists after checking the above, you can get technical assistance by dialing

1-800-423-9883 USA
1-800-461-0013 Canada

An engineer will discuss your problem with you. Please have your complete model number, serial number, and Software version available. The model and serial numbers can be found on the chassis nameplate. The software version can be viewed under Setup Group "Status."
See Table 9-2.

If it is determined that a hardware problem exists, a replacement controller or part will be shipped with instructions for returning the defective unit. Do not return your controller without authorization from Honeywell's Technical Assistance Center or until the replacement has been received.

Table of Contents

SECTION 1 – OVERVIEW 1

1.1 Introduction 1
1.2 Operator Interface 2

SECTION 2 – INSTALLATION 5

2.1 Overview 5
2.2 Model Number Interpretation 7
2.3 Mounting 8
2.4 Wiring 10
2.5 Wiring Diagrams 12
2.6 Control and Alarm Relay Contact Information 27

SECTION 3 – CONFIGURATION 29

3.1 Overview 29
3.2 Configuration Prompts 30
3.3 How To Get Started 32
3.4 Configuration Tips 33
3.5 Configuration Procedure 34
3.6 Timer Parameters Set Up Group 36
3.7 Tuning Parameters Set Up Group 37
3.8 SP Ramp/Program Set Up Group 39
3.9 Adaptive Tune Set Up Group 40
3.10 Algorithm Data Set Up Group 41
3.11 Input 1 Parameters Set Up Group 42
3.12 Input 2 Parameters Set Up Group 44
3.13 Control Parameters Set Up Group 45
3.14 Options Set Up Group 47
3.15 Communications Group 48
3.16 Alarms Set Up Group 49
3.17 Calib Group 51
3.18 Status Group 51
3.19 Configuration Record Sheet 52

SECTION 4 – CONFIGURATION PROMPT DEFINITIONS 53

4.1 Overview 53
4.2 Timer Parameters Set Up Group 54
4.3 Tuning Parameters Set Up Group 55
4.4 Setpoint Ramp/Program Set Up Group 58
4.5 Adaptive Tune Set Up Group 59
4.6 Algorithm Data Set Up Group 61
4.7 Input 1 Parameters Set Up Group 65
4.8 Input 2 Parameters Set Up Group 69
4.9 Control Parameters Set Up Group 71
4.10 Options Set Up Group 76
4.11 Communications Set Up Group 79
4.12 Alarms Set Up Group 81
4.13 Calibration Data 84
4.14 Status Test Data 84

Continued on next page

Table of Contents

SECTION 5 – OPERATION 85

5.1 Overview 85
5.2 How to Power Up the Controller 86
5.3 Enter a Security Code 88
5.4 Monitoring Your Controller 89
5.5 Start-up 92
5.6 Operating Modes 93
5.7 Setpoints 96
5.8 Setpoint Rate 99
5.9 Single Setpoint Ramp 100
5.10 Using Two Set of Tuning Constants 103
5.11 Alarm Setpoints 106
5.12 Three Position Step Control Algorithm 107
5.13 Digital Input Option (Remote Switching) 108
5.14 Auto/Manual Station 110
5.15 Adaptive Tune (Accutune™) 114

SECTION 6 – SETPOINT RAMP/SOAK PROGRAMMING OPTION 121

6.1 Overview 121
6.2 Program Contents 122
6.3 Drawing a Ramp/Soak Profile 124
6.4 Entering the Setpoint Program Data 126
6.5 Run/Monitor the Program 129

SECTION 7 – INPUT CALIBRATION 133

7.1 Overview 133
7.2 Minimum and Maximum Range Values 134
7.3 Preliminary Information 135
7.4 Input #1 Set Up Wiring 137
7.5 Input #1 Calibration Procedure 143
7.6 Input #2 Set Up Wiring 145

SECTION 8 – OUTPUT CALIBRATION 149

8.1 Overview 149
8.2 Current Proportional Output Calibration 150
8.3 Position Proportional and Three Position Step Output Calibration 152
8.4 Auxiliary Output Calibration 156

SECTION 9 – TROUBLESHOOTING / SERVICE 159

9.1 Overview 159
9.2 Troubleshooting Aids 161
9.3 Power-up Tests 163
9.4 Status Tests 164
9.5 Background Tests 166
9.6 Controller Failure Symptoms 168
9.7 Troubleshooting Procedures 169
9.8 Parts Replacement Procedures 177
9.9 Maintenance 187

SECTION 10 – PARTS LIST 189

10.1 Exploded View 189

Continued on next page

Table of Contents

SECTION 11 – APPENDIX A – MANUAL TUNING 193

11.1 Overview 193
11.2 Time, Position, or Current Proportional Simplex Control 194
11.3 Time Proportional Duplex or Current Proportional Duplex Control 196
11.4 Two Sets of Tuning Parameters 196

SECTION 12 - APPENDIX B 197

12.1 Overview 197
12.2 Potential Noise Sources 198
12.3 Prevention Methods 199
12.4 Recommended Wiring Practices 200
12.5 Power Source Considerations 202
12.6 Noise Suppression at the Source 203

Figures

Figure 1-1 Operator Interface Displays and Indicators 2
Figure 2-1 Model Number Interpretation 7
Figure 2-2 Dimensions 8
Figure 2-3 Mounting Method 9
Figure 2-4 Composite Wiring Diagram 12
Figure 2-5 Line Voltage Wiring 13
Figure 2-6 Input #1 Connections 14
Figure 2-7 Input #2 Connections 15
Figure 2-8 Electromechanical Relay Output 16
Figure 2-9 Solid State Relay Output 17
Figure 2-10 Open Collector Output 18
Figure 2-11 Current Output 19
Figure 2-12 Position Proportional Output 20
Figure 2-13 Auxiliary Output Connections 21
Figure 2-14 Digital Inputs Connections 22
Figure 2-15 RS422/485 Communications Option Connections 23
Figure 2-16 DMCS Communications Option Connections 24
Figure 2-17 Transmitter Power for 4-20 mA 2-wire Transmitter Using Open Collector Alarm 2 Output 25
Figure 2-18 Transmitter Power for 4-20 mA 2-wire Transmitter Using Auxiliary Output 26
Figure 3-1 Overview of UDC 3000 Prompt Hierarchy 30
Figure 5-1 Operator Interface 89
Figure 5-2 Auto/Manual Station and Backup Control Feature 110
Figure 6-1 Ramp/Soak Profile Example 124
Figure 6-2 Program Record Sheet 125
Figure 7-1 Input #1 and #2 Wiring Terminals 135
Figure 7-2 Wiring Connections for Thermocouple Inputs Using an Ice Bath 137
Figure 7-3 Wiring Connections for Thermocouple Inputs Using a Precision Resistor 138
Figure 7-4 Wiring Connections for RTD (Resistance Thermometer Device 139
Figure 7-5 Wiring Connections for Radiamatic, Millivolts, or Volts (except 0 to 10 Volts) 140
Figure 7-6 Wiring Connections for 0 to 10 Volt Inputs 141
Figure 7-7 Wiring Connections for 4 to 20 mA Inputs 142
Figure 7-8 Wiring Connections for 4 to 20 mA Input – Input #2 145
Figure 7-9 Wiring Connections for 1 to 5 Volt Input – Input 2 146
Figure 8-1 Wiring Connections for Calibrating Current Proportional Output 150
Figure 8-2 Wiring Connections for Calibrating Auxiliary Output 156
Figure 9-1 Chassis Removal 178
Figure 9-2 Display/Keyboard Replacement 179
Figure 9-3 Removing the Printed Wiring Boards 180
Figure 9-4 Printed Wiring Board Identification 181
Figure 10-1 UDC 3000 Exploded View 189
Figure 12-1 Transformer for Digital Equipment 202
Figure 12-2 Transient Suppression in Inductive Coils 204
Figure 12-3 Contact Noise Suppression 205
Figure 12-4 DC Load Noise Suppression 206

Tables

Table 1-1 Function of Keys 3
Table 2-1 Operating Limits 6
Table 2-2 Permissible Wiring Bundling 10
Table 2-3 Control Relay Contact Information 27
Table 3-1 Configuration Tips 33
Table 3-2 Configuration Procedure 34
Table 3-3 Timer Group Function Prompts 36
Table 3-4 Tuning Group Function Prompts 38
Table 3-5 SP Ramp Group Function Prompts 39
Table 3-6 Adaptive Tune Group Function Prompts 40
Table 3-7 Algorithm Group Function Prompts 41
Table 3-8 Input 1 Group Function Prompts 42
Table 3-9 Input 2 Group Function Prompts 44
Table 3-10 Control Group Function Prompts 45
Table 3-11 Options Group Function Prompts 47
Table 3-12 Com Group Function Prompts 48
Table 3-13 Alarms Group Function Prompts 49
Table 4-1 Timer Group Prompt Definitions 54
Table 4-2 Tuning Group Prompt Definitions 55
Table 4-3 Setpoint Ramp/Rate/Program Group Definitions 58
Table 4-4 Adaptive Tune Group Definitions 59
Table 4-5 Algorithm Group Definitions 61
Table 4-6 Input 1 Group definitions 65
Table 4-7 Input 2 Group Definitions 69
Table 4-8 Control Group Definitions 71
Table 4-9 Option Group Definitions 76
Table 4-10 Communications Group Definitions 79
Table 4-11 Alarms Group Definitions 81
Table 5-1 Power Up Diagnostic Tests 86
Table 5-2 Procedure for Testing the Displays and Keys 87
Table 5-3 Procedure for Entering a Security Code 88
Table 5-4 Lower Display Key Parameter Prompts 90
Table 5-5 Error Messages 91
Table 5-6 Procedure for Starting Up the Controller 92
Table 5-7 Operating Mode Definitions 93
Table 5-8 Changing Operating Modes 93
Table 5-9 Procedure for Selecting Automatic or Manual Mode 94
Table 5-10 Procedure for Selecting the Local Setpoint Source 96
Table 5-11 Procedure for Changing the Local Setpoints 96
Table 5-12 Procedure for Enabling (or disabling) the Remote Setpoint 97
Table 5-13 Procedure for Switching Between Setpoints 97
Table 5-14 Setpoint Selection Indication 98
Table 5-15 Procedure for Configuring a Setpoint Ramp 100
Table 5-16 Procedure for Running a Setpoint Ramp 101
Table 5-17 Procedure for Selecting Two Set of Tuning Constants 103
Table 5-18 Procedure for Setting Switchover Values 104
Table 5-19 Procedure for Setting Tuning Constant Values 104
Table 5-20 Procedure for switching PID SETS from the Keyboard 105
Table 5-21 Procedure for Displaying or Changing the Alarm Setpoints 106
Table 5-22 Procedure for Displaying the 3PSTEP Motor Position 107
Table 5-23 Digital Input Option Action on Contact Closure 108
Table 5-24 Auto/Manual Station Mode Configuration Procedure 112
Table 5-25 Procedure for Configuring Adaptive Tune Parameters 115
Table 5-26 Procedure for Using Adaptive Tune at Start-up 117
Table 5-27 Procedure for Accessing Adaptive Tune Error Codes 119
Table 5-28 Adaptive Tune Error Code Definitions 119

Continued on next page

Tables

Table 6-1 Setpoint Program Data Entry Procedure 126
Table 6-2 Prompt Hierarchy and Available Selections 127
Table 6-3 Run/Monitor Functions 129
Table 7-1 Voltage and Resistance Equivalents for 0% and 100% Range Values 134
Table 7-2 Equipment Needed 136
Table 7-3 Set Up Wiring Procedure for Thermocouple Inputs Using An Ice Bath 137
Table 7-4 Set Up Wiring Procedure for Thermocouple Inputs Using a Precision Resistor 138
Table 7-5 Input #1 Calibration Procedure 143
Table 7-6 Input #2 Calibration Procedure 147
Table 8-1 Set Up Wiring Procedure Current Proportional Output 150
Table 8-2 Current Proportional Output Calibration Procedure 151
Table 8-3 Position Proportional and 3 Position Step Output Calibration Procedure 153
Table 8-4 Set Up Wiring Procedure for Auxiliary Output 156
Table 8-5 Auxiliary Output Calibration Procedure 157
Table 9-1 Error Message Prompts 161
Table 9-2 Procedure for Identifying the Software Version 162
Table 9-3 Power-up Tests 163
Table 9-4 Procedure for Displaying the Status Tests Results 164
Table 9-5 Status Tests 165
Table 9-6 Background Tests 166
Table 9-7 Controller Failure Symptoms 168
Table 9-8 Troubleshooting Power Failure Symptoms 169
Table 9-9 Troubleshooting Current Proportional Output Failure 170
Table 9-10 Troubleshooting Position Proportional Output Failure 171
Table 9-11 Troubleshooting Time Proportional Output Failure 172
Table 9-12 Troubleshooting Time/Current or Current/Time Proportional Output Failure 173
Table 9-13 Troubleshooting Alarm Relay Output Failure 174
Table 9-14 Troubleshooting a Keyboard Failure 175
Table 9-15 Troubleshooting a Communications Failure 176
Table 9-16 How to Remove the Chassis 178
Table 9-17 Display/Keyboard Assembly Replacement Procedure 179
Table 9-18 Printed Wiring Board Removal from Chassis 180
Table 9-19 Second Input Board Replacement Procedure 182
Table 9-20 Power Input Board Replacement Procedure 183
Table 9-21 Digital Input Board Replacement Procedure 184
Table 9-22 Aux.Out/Communications Board Replacement Procedure 185
Table 9-23 MCU/Output Board Replacement Procedure 186
Table 10-1 Parts Identification 190
Table 10-2 Parts Not Shown 191
Table 11-1 Manual Tuning Procedure for Simplex Control 194
Table 11-2 Manual Tuning Formulas 195
Table 12-1 External Wiring 200
Table 12-2 MOV Devices 203
Table 12-3 Coil Voltage vs Resistor Voltage Rating 204

Acronyms

3PSTEP ..... 3 Position Step Control
DMCS ..... Distributed Manufacturing Control System
EMI ..... electromagnetic interference
HID ..... high intensity discharge
MOVs ..... Metal Oxide Varistors
NC ..... normally closed
NO ..... normally open
PID ..... Proportional, Integral, and Derivative
RC ..... resistance-capacitance
RFI ..... radio frequency interference
RH ..... Relative Humidity
RTD ..... Resistance Thermometer Device
SCRs ..... Silicon controlled rectifiers
UDC ..... Universal Digital Controller

Parameters

2IN ..... Input 2
2SP ..... Local Setpoint 2
A1S1 EV ..... SP Programming Event Alarm State for Alarm 1, Setpoint 1
A1S1 VAL ..... Alarm 1, Setpoint 1
A1S1TYPE ..... Alarm 1, Setpoint 1 Type
A1S2 EV ..... SP Programming Event Alarm State for Alarm 1, Setpoint 2
A1S2 HL ..... Alarm 1, Setpoint 2 State
A1S2 VAL ..... Alarm 1, Setpoint 2
A1S2TYPE ..... Alarm 1, Setpoint 2 Type
A2S1 EV ..... SP Programming Event Alarm State for Alarm 2, Setpoint 1
A2S1 HL ..... Alarm 2, Setpoint 1 State
A2S1 VAL ..... Alarm 2, Setpoint 1
A2S1TYPE ..... Alarm 2, Setpoint 1
A2S2 EV ..... SP Programming Event Alarm State for Alarm 2, Setpoint 2
A2S2 HL ..... Alarm 2, Setpoint 2 State
A2S2 VAL ..... Alarm 2, Setpoint 2
A2S2TYPE ..... Alarm 2, Setpoint 2 Type
ACTION ..... Control Output Direction
ADAPTIVE ..... Adaptive Tune
AL HYST ..... Alarm Hysteresis
AM STA ..... Auto Manual Station mode
AT ERROR ..... Adaptive Tune Error codes
AUTO ..... Lower display automatically displays setpoint value in engineering units
AUTO MAN ..... Manual/Auto Key Lockout
AUX OUT ..... Auxiliary Output Representation
BAUD ..... Baud Rate
BIA ..... Output Bias/Manual Reset value
BIAS IN1 ..... Input 1 Bias
CAL MTR ..... suggests that the controller be calibrated
CAL TEST ..... Calibration test failure
Com ADDR ..... Communications Station Address
ComSTATE ..... Communications Option State
CONF ERR ..... configuration error
CONFTEST ..... Configuration test failure
CONT ALG ..... Control Algorithm
CRITERIA ..... Tuning Criteria

CSP ..... Computer Setpoint Override
CYC SEC ..... Cycle Time
CYC2 SEC ..... Cycle Time 2 (Cool)
DEADBAND ..... Output Relay Deadband
DEV ..... Deviation
DIG 1 COM ..... Digital Input 1 Combinations
DIG 2 COM ..... Digital Input 2 Combinations
DIG IN 1 ..... Digital Input 1 selections
DIG IN 2 ..... Digital Input 2 selections
DROPOFF ..... Controller Dropoff Value
DUPLEX ..... Duplex Operation
E E FAIL ..... Unable to write to non-volatile memory
EMSSIV ..... Emissivity
END SEG ..... End Segment Number
ET ..... Elapsed time
EU/HR DN ..... Rate Down Value
EU/HR UP ..... Rate Up Value
FACT CRC ..... Factory Calibration Cyclic Redundancy test
FAILSAFE ..... Controller in Failsafe
FAILSAFE ..... Failsafe Output Value
FILTER 1 ..... Input 1 Filter
FILTER2 ..... Input 2 Filter
FINAL SP ..... Single Setpoint Final Setpoint
GAIN ..... Gain
GAIN2 ..... Gain 2
IN1 HI ..... Input 1 High Range Value
IN1 LO ..... Input 1 Low Range Value
IN1 TYPE ..... Input 1 Actuation Type
IN2HI ..... Input 2 High Range Value
IN2LO ..... Input 2 Low Range Value
INP1 RNG ..... Input 1 Out of Range
INP1FAIL ..... Two consecutive failures of Input 1 integration
INP2 RNG ..... Input 2 Out of Range
INP2FAIL ..... Two consecutive failures of Input 2 integration
KPG ..... Process Gain
L DISP ..... Lower Display Selection
LOCKOUT ..... Configuration Lockout
LOOPBACK ..... Local Loop Back
MAN ..... Lower display automatically indicates output in %
MAN RSET ..... Manual Reset
MINorRPM ..... Reset Units
OUT ALG ..... Output Algorithm
OUT HYST ..... Output Relay Hysteresis
OUT ..... Output value
OUT RATE ..... Output Change Rate
OUTHILIM ..... High Output Limit
OUTLOLIM ..... Low Output Limit
PARITY ..... Parity
PBorGAIN ..... Proportional Band or Gain Units
PCT/MIN ..... Output Rate
PERIOD ..... Timeout Period
PID SETS ..... Tuning Parameter Sets
PIDSETX ..... Tuning Parameter Set
POS ..... Motor Position
PROG END ..... Program Termination State
PROP BD ..... Proportional Band
PROP BD2 ..... Proportional Band 2

PV LIMIT ..... PV Out of Range
PWR FREQ ..... Power Line Frequency
RAM TEST ..... RAM test failed
RAMPUNIT ..... Engineering units for ramp segments
RAMPXXOM ..... Minutes remaining in Setpoint Ramp
RATE MIN ..... Rate in Minutes
RATE2MIN ..... Rate 2 in Minutes
RECYCLES ..... Number of Program Recycles
RLY TYPE ..... Output Relay Type
RSET MIN ..... Reset in minutes/repeat
RSET RPM ..... Reset in repeats/minute
RSET2MIN ..... Reset 2 in minutes/repeat
RSET2RPM ..... Reset 2 in repeats/minute
RSP ..... Remote Setpoint
RSP SRC ..... Remote Setpoint Source
RUN HOLD ..... Run/Hold key
RV LIMIT ..... Remote Variable Out of Range
SECURITY ..... Security Code
SEG 1 RATE ..... Segment #1 Ramp Rate
SEG 1 RAMP ..... Segment #1 Ramp Time
SHED SP ..... Shed Setpoint Recall
SHEDMODE ..... Shed Controller Mode and Output Level
SHEDTIME ..... Shed Time
SOAK DEV ..... Guaranteed Soak Deviation Value
SP CHANG ..... Setpoint Change
SP HILIM ..... Setpoint High Limit
SP ..... Local Setpoint 1
SP LOLIM ..... Setpoint Low Limit
SP PROG ..... Setpoint Programming
SP PROG ..... Setpoint Ramp/Soak Programming
SP RAMP ..... Setpoint Ramp selection
SP RAMP ..... Single Setpoint Ramp
SP RATE ..... Setpoint Rate
SP SEL ..... Setpoint Select
SP SOURC ..... Local Setpoint Source
SP TRACK ..... Local Setpoint Tracking
SPn ..... Setpoint Now
STATE ..... Program state at program end
STRT SEG ..... Start Segment Number
SW FAIL ..... Auto Calibration never performed
SW FAIL ..... Position Proportional slidewire input failure
SW VALUE ..... Automatic Switchover Value
TIME MIN ..... Single Setpoint Ramp Time
TIMER ..... Timer Enable/Disable
TR ..... Time remaining
TX DELAY ..... Transmission Delay
UNITS ..... Communication Units
XMITTER ..... Transmitter Characterization
XMITTER2 ..... Transmitter Characterization Input 2

References

Publication Title	Publication Number
UDC 3000 Limit Controller	51-52-25-09
UDC 3000/UDC5000/UDC6000 RS422/485 Communications Option Manual	51-51-25-35
UDC 3000 DMCS Communications Option Section of the Gateway Manual	82-50-10-23

Section 1 – Overview

1.1 Introduction

Function

The UDC 3000 Universal Digital Controller is a microprocessor-based stand alone controller. It combines the highest degree of functionality and operating simplicity offered in a 1/4 DIN size controller.

With a typical accuracy of ±0.20% of span, the UDC 3000 is an ideal controller for regulating temperature and other process variables in numerous heating and cooling applications, in metal working, food, and pharmaceuticals, and testing and environmental work.

Easy to read displays

The dedicated vacuum fluorescent displays with English prompts make the operator interface easy to read, understand and operate.
Programmed sequences of displays assure quick and accurate entry of all configurable parameters.

Easy to operate

Simple keystrokes let you select input and range configuration, set the operating parameters that meet your process control needs now, and change them later to meet new ones.

The tactile keyboard provides positive operator feedback. Self diagnostics, fault tolerant design and keyboard security provide maximum assurance of trouble-free operation.

Mount anywhere

The UDC is industrial control equipment that must be panel mounted. The wiring terminals must be enclosed within the panel. The UDC is environmentally hardened and, when suitably enclosed, can be mounted virtually anywhere in plant or factory; on the wall, in a panel, or even on the process machine. It withstands ambient temperatures up to 55°C (133°F) and resists the effects of vibration and mechanical shock.

CE Conformity (Europe)

This product is in conformity with the protection requirements of the following European Council Directives: 73/23/EEC, the Low Voltage Directive, and 89/336/EEC, the EMC Directive. Conformity of this product with any other "CE Mark" Directive(s) shall not be assumed.

Deviation from the installation conditions specified in this manual, and the special conditions for CE conformity in Section 2.1, may invalidate this product's conformity with the Low Voltage and EMC Directives.

ATTENTION

The emission limits of EN 50081-2 are designed to provide reasonable protection against harmful interference when this equipment is operated in an industrial environment. Operation of this equipment in a residential area may cause harmful interference. This equipment generates, uses, and can radiate radio frequency energy and may cause interference to radio and television reception when the equipment is used closer than 30 meters (98 feet) to the antenna(s). In special cases, when highly susceptible apparatus is used in close proximity, the user may have to employ additional mitigating measures to further reduce the electromagnetic emissions of this equipment.

1.2 Operator Interface

Displays and Indicators

Figure 1-1 shows the operator interface and defines the displays and indicators. The function of the keys is shown in Table 1-1.

Figure 1-1 Operator Interface Displays and Indicators

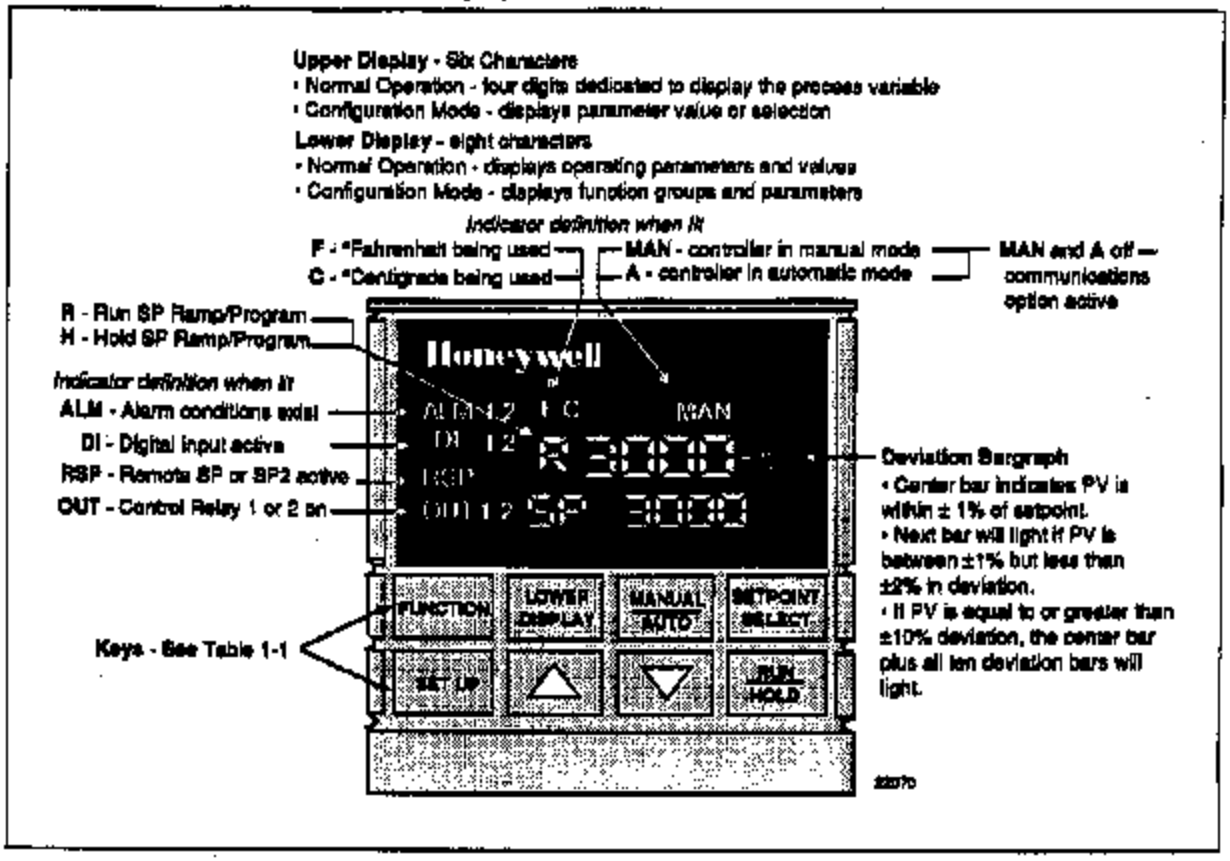

Continued on next page

Function of keys

Table 1-1 shows each key on the operator interface and defines its function.

Table 1-1 Function of Keys

Key	Function
SET UP	• Places the controller in the Configuration Set Up group select mode. Sequentially displays Set Up groups and allows the FUNCTION key to display individual functions in each Set Up group.
FUNCTION	• Used in conjunction with the SET UP key to select the individual functions of a selected Configuration Set Up group. • Used during field calibration procedure.
LOWER DISPLAY	• Selects an operating parameter to be shown in the lower display: SP = Local Setpoint 1 2SP = Local Setpoint 2 RSP = Remote Setpoint 2IN = Input 2 DEV = Deviation RAMPXXOM = Minutes remaining in Setpoint Ramp PIDSETX = Tuning Parameter Set X=1 or 2 OUT = Output value* CSP = Computer Setpoint Override SPn = Setpoint Now (for setpoint rate) POS = 3 Position Step motor position when slidewire is connected BIA = Output Bias/Manual Reset value ET_XX.XX = Elapsed time TR_XX.XX = Time remaining * or estimated 3 Position Step motor position when no slidewire exists.
MANUAL AUTO	• Alternately selects: AUTO Lower display automatically displays setpoint value in engineering units. MAN Lower display automatically indicates output in %.
SETPOINT SELECT	• Alternately selects Local Setpoint 1 and Remote Setpoint or between the two local setpoints.

Continued on next page

Function of keys (continued)

Table 1-1 Function of Keys, Continued

Key	Function
RUN HOLD	• Alternate action switch initiates or holds the Setpoint Ramp or Setpoint Program. • Restores the original value or selection if you do not want to enter a change you are making to a parameter.
▲	• Increases the setpoint, output, or configuration values displayed.
▼	• Decreases the setpoint, output, or configuration values displayed.

Section 2 – Installation

2.1 Overview

Introduction

Installation of the UDC 3000 Controller consists of mounting and wiring the controller according to the instructions given in this section.
Read the pre-installation information, check the model number interpretation and become familiar with your model selections, then proceed with installation.

What's in this section?

This section contains the following information:

Topic	See Page
2.1 Overview	5
Pre-Installation Information	5
CE Conformity	6
Operating Limits	6
2.2 Model Number Interpretation	7
2.3 Mounting	8
Physical Considerations	8
Overall Dimensions	8
Mounting Procedure	9
2.4 Wiring	10
Electrical Considerations	10
Controller Grounding	10
Control/Alarm Circuit Wiring	10
Taking Electrical Noise Precautions	10
Permissible Wire Bundling	11
Identify Your Wiring Requirements	11
Wiring the Controller	11
2.5 Wiring Diagrams	12
Composite Wiring Diagram	12
AC Line Voltage	13
Input #1	14
Input #2	15
Relay Output	16
Electromechanical	16
Solid State	17
Open Collector	18
Current Output	19
Position Proportional Output	20
Auxiliary Output	21
Digital Inputs	22
Communications	23
RS422/485	23
DMCS	24
Transmitter Power for 4-20 mA 2-wire Transmitter	
Using Open Collector Alarm 2 Output	25
Using Auxiliary Output	26
2.6 Control and Alarm Relay Contact Information	27

Continued on next page

Pre-installation information

If the controller has not been removed from its shipping carton, inspect the carton for damage and remove the controller. Inspect the unit for any obvious shipping damage and report any damage due to transit to the carrier.

Make sure a bag containing mounting hardware is included in the carton with the controller.

Check that the model number shown on the inside of the case agrees with what you have ordered.

CE Conformity special conditions (Europe)

Shielded twisted pair cables are required for all Analog I/O, Process Variable, RTD, Thermocouple, dc millivolt, low level signal, 4-20 mA, Digital I/O, and computer interface circuits. Refer to the Severe Electrical Noise Environments Appendix for additional information.

Operating limits

We recommend that you review and adhere to the operating limits listed in Table 2-1 when you install your controller.

Table 2-1 Operating Limits

Condition	Specifications
Ambient Temperature	32 to 131°F (0 to 55°C)
Relative Humidity	5 to 90% RH at 40°C (104°F)
Vibration Frequency Acceleration	 0 to 200 Hz 0.2g
Mechanical Shock Acceleration Duration	 5g 30 ms
Power 90 to 264Vac 24Vac/dc	 90 to 264 Vac 50/60 Hz (CSA models rated to 250V Maximum) 20 to 27Vac 50/60 Hz 20 to 27Vdc 0 Hz
Power Consumption	18VA Maximum

2.2 Model Number Interpretation

Model number

The model number interpretation is shown in Figure 2-1. Write the model number into the spaces provided and compare it to the model number interpretation. This information will also be useful when you wire your controller.

Figure 2-1 Model Number Interpretation

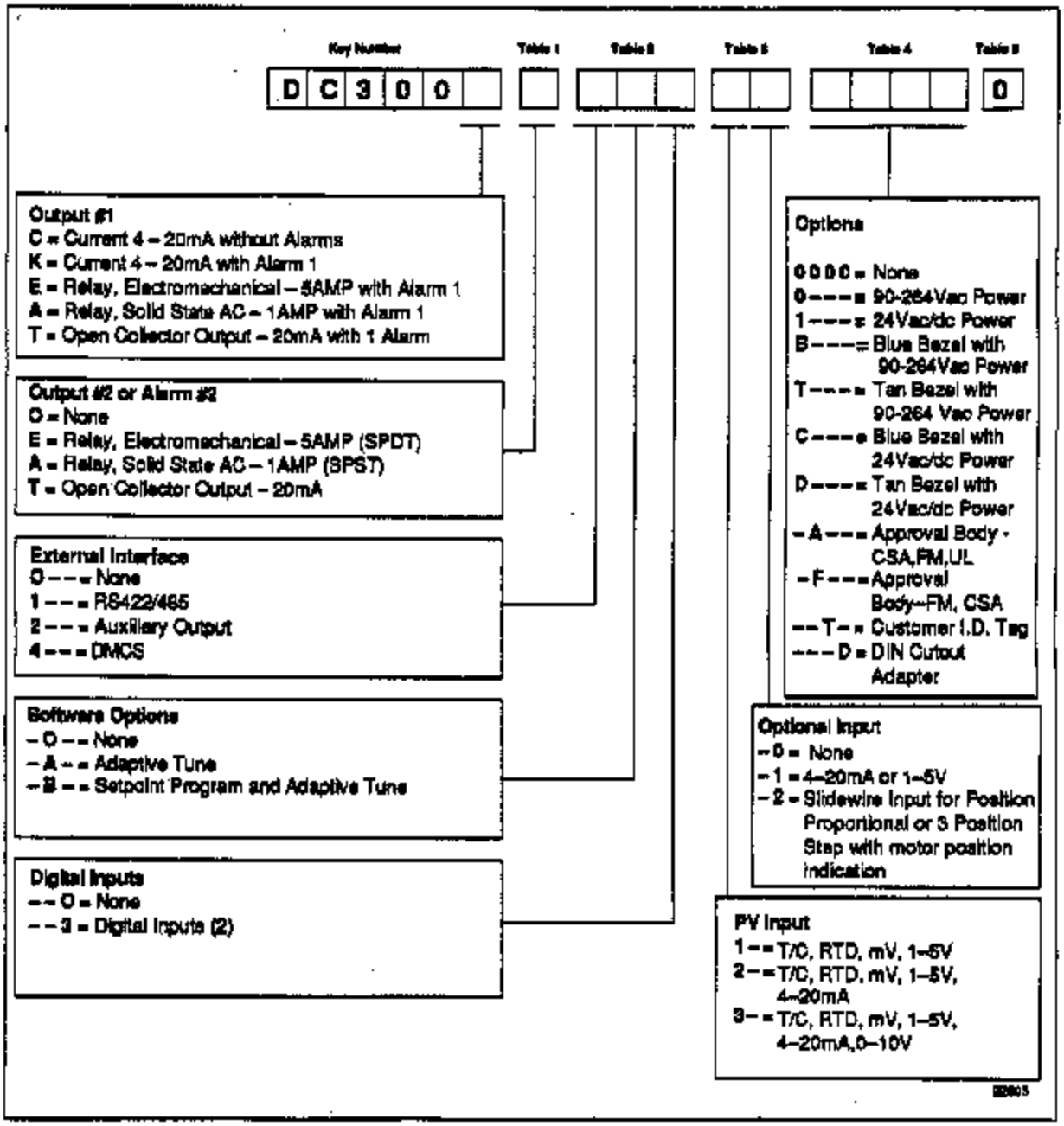

2.3 Mounting

Physical considerations

The controller can be mounted on either a vertical or tilted panel using the mounting kit supplied. Adequate access space must be available at the back of the panel for installation and servicing activities.

The overall dimensions and panel cutout requirements for mounting the controller are shown in Figure 2-2.

Overall dimensions

Figure 2-2 shows the overall dimensions for mounting the controller.

Figure 2-2 Dimensions

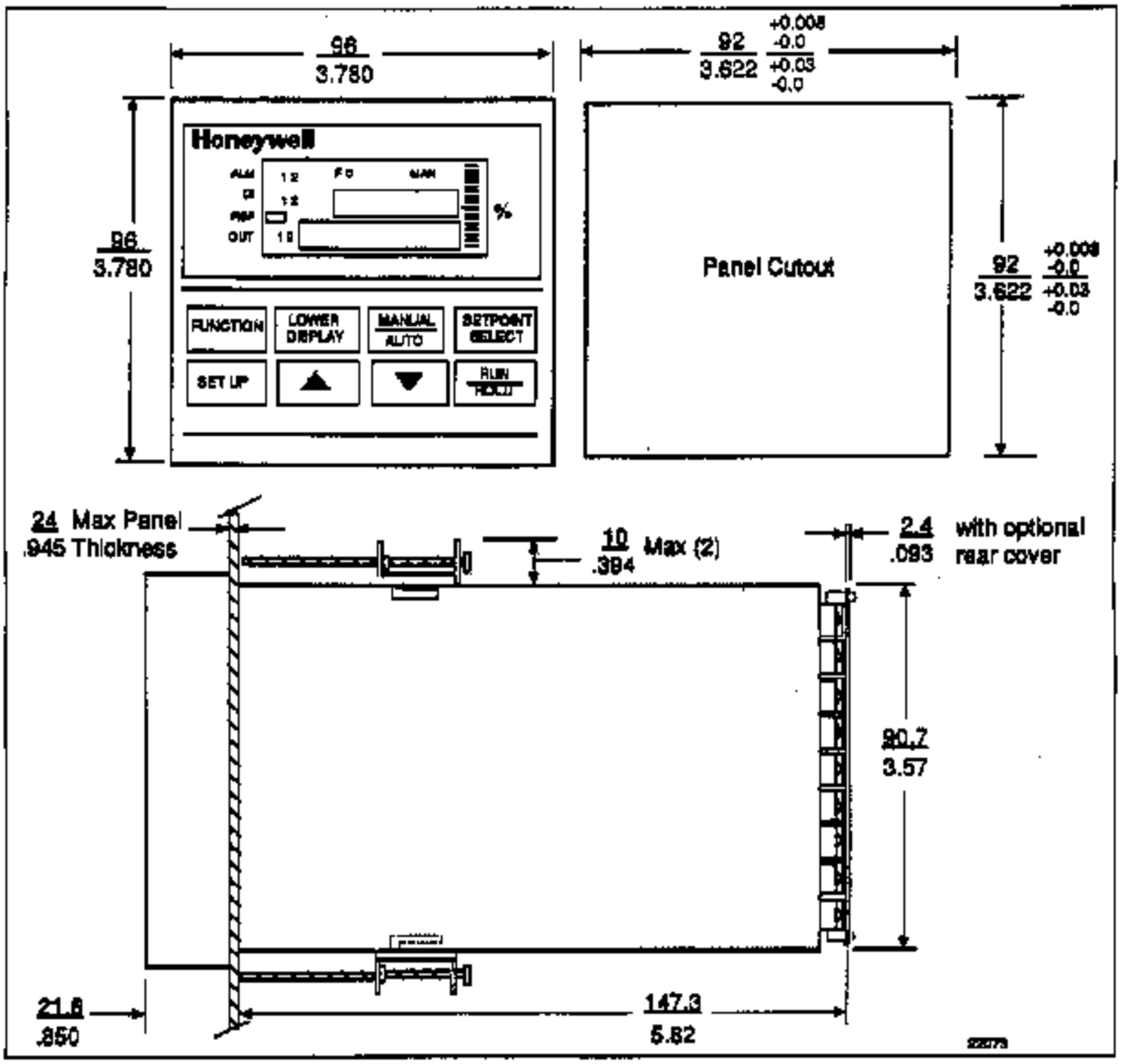

Continued on next page

Mounting method

Before mounting the controller, refer to the nameplate on the inside of the case and make a note of the model number. It will help later when selecting the proper wiring configuration.

Figure 2-3 shows you the mounting method for the UDC 3000 controller.

Figure 2-3 Mounting Method

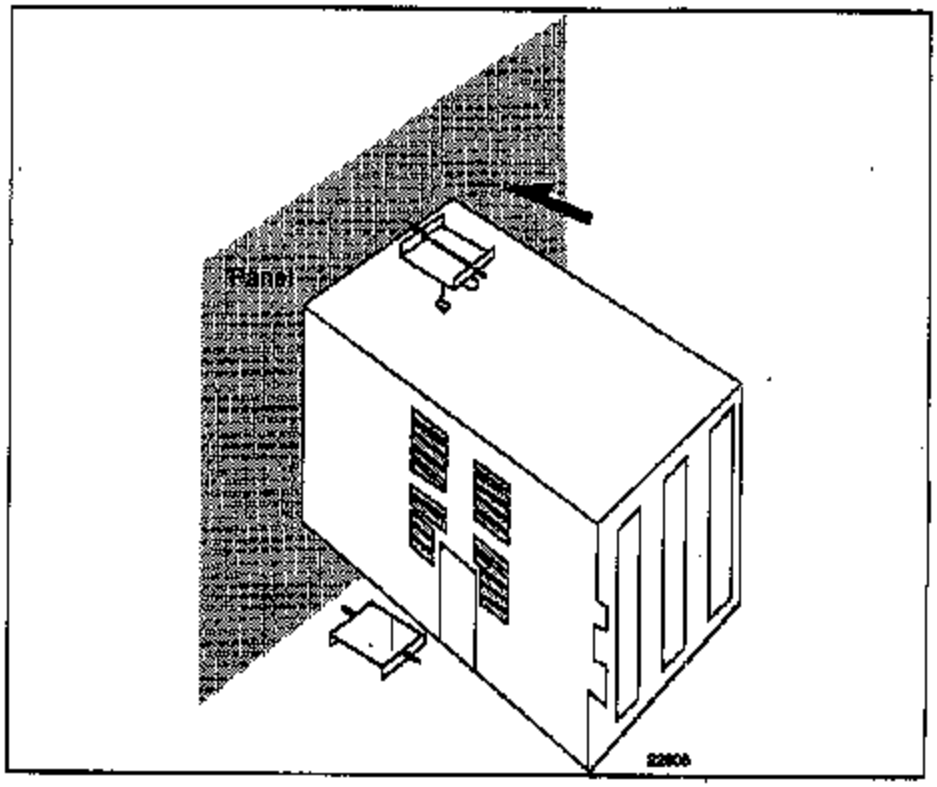

Mounting procedure

Refer to Figure 2-3 and follow the procedure below to mount the controller.

Step	Action
1	Mark and cut out the controller hole in the panel according to the dimension information in Figure 2-2.
2	Remove the screw cover and loosen the screw on the front of the controller. Pull the chassis out of the case.
3	Orient the case properly and slide it through the panel hole from the front.
4	Remove the mounting kit from the shipping container, and install the kit as follows: • Install the screws into the threaded holes of the clips. • Insert the prongs of the clips into the two holes in the top and bottom of the case. • Tighten both screws to secure the case against the panel. • Carefully slide the chassis assembly into the case, press to close and tighten the screw. Replace the screw cover.

2.4 Wiring

Electrical considerations

The controller is considered "rack and panel mounted equipment" per EN 61010-1, Safety Requirements for Electrical Equipment for Measurement, Control, and Laboratory Use, Part 1: General Requirements. Conformity with 72/23/EEC, the Low Voltage Directive requires the user to provide adequate protection against a shock hazard. The user shall install this controller in an enclosure that limits OPERATOR access to the rear terminals.

Controller grounding

PROTECTIVE BONDING (grounding) of this controller and the enclosure in which it is installed shall be in accordance with National and local electrical codes. To minimize electrical noise and transients that may adversely affect the system, supplementary bonding of the controller enclosure to a local ground, using a No. 12 (4 mm^2) copper conductor, is recommended.

Control/Alarm circuit wiring

The insulation of wires connected to the Control/Alarm terminals shall be rated for the highest voltage involved. Extra Low Voltage (ELV) wiring (input, current output, and low voltage Control/Alarm circuits) shall be separated from HAZARDOUS LIVE (>30 Vac, 42.4 Vpeak, or 60 Vdc) wiring per Table 2-2.

Taking electrical noise precautions

Electrical noise is composed of unabated electrical signals which produce undesirable effects in measurements and control circuits.

Digital equipment is especially sensitive to the effects of electrical noise. Your controller has built-in circuits to reduce the effect of electrical noise from various sources. If there is a need to further reduce these effects:

- Separate External Wiring - separate connecting wires into bundles (see Table 2-2) and route the individual bundles through separate conduits or metal trays.
- Use Suppression Devices - for additional noise protection, you may want to add suppression devices at the external source. Appropriate suppression devices are commercially available.

NOTE For additional noise information, refer to *Section 12* .

Continued on next page

Permissible wire bundling

Table 2-2 shows which wire functions should be bundled together.

NOTE *For installation where high EMI/RFI noise cannot be avoided, we recommend you use shielded twisted pair wires for the signals in bundle 2.*

Table 2-2 Permissible Wiring Bundling

Bundle No.	Wire Functions
1	• Line power wiring • Earth ground wiring • Control relay output wiring • Line voltage alarm wiring
2	Analog signal wire, such as: • Input signal wire (thermocouple, 4 to 20 mA, etc.) • 4-20 mA output signal wiring • Slidewire feedback circuit wiring • Digital input signals • Communications
3	• Low voltage alarm relay output wiring • Low voltage wiring to solid state type control circuits

Identify your wiring requirements

To determine the appropriate diagrams for wiring your controller, refer to the model number interpretation in this section. The model number of the controller can be found on the inside of the case.

Wiring the controller

Using the information contained in the model number, select the appropriate wiring diagrams from the figures listed below and wire the controller accordingly.

Wiring Requirements	Figure
Composite Wiring Diagram	2-4
Line Power 90–264 Vac or 24Vac/dc	2-5
Input #1 Wiring	2-6
Input #2 Wiring	2-7
Relay Output • Electromechanical Relay Output • Solid State Relay Output • Open Collector Output	 2-8 2-9 2-10
Current Output	2-11
Position Proportional Output	2-12
Auxiliary Output Wiring	2-13
Digital Inputs Wiring	2-14
Communications Wiring • RS422 • DMCS	 2-15 2-16
Transmitter Power for 4-20 mA 2-wire Transmitters • Open Collector Alarm 2 Output • Auxiliary Output	 2-17 2-18

2.5 Wiring Diagrams

Composite wiring diagram

Figure 2-4 is a composite wiring diagram of the UDC 3000 controller. It identifies the terminal designations and their functions. Refer to the individual diagrams listed to wire the controller according to your requirements.

Figure 2-4 Composite Wiring Diagram

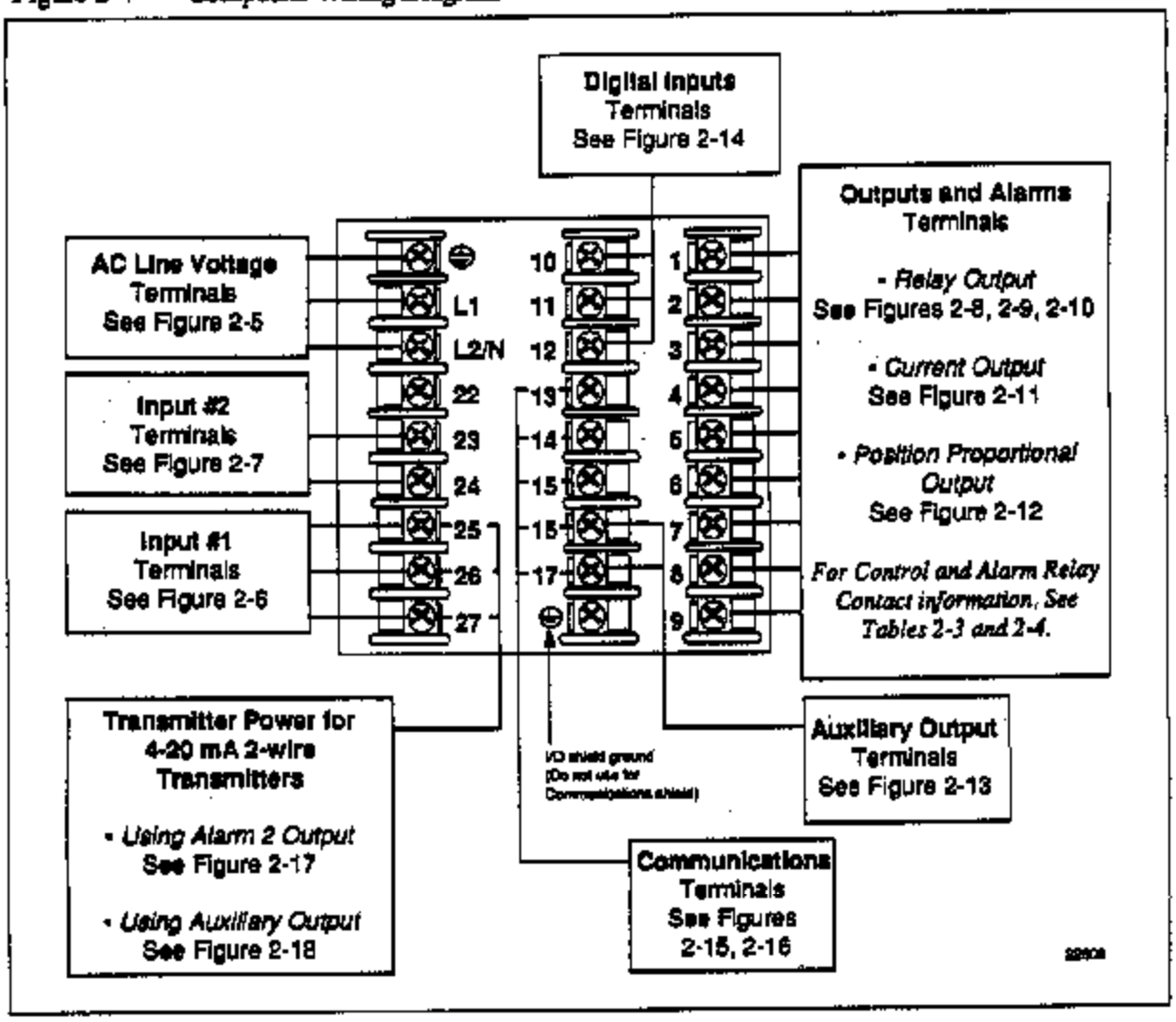

Continued on next page

Line voltage wiring

This equipment is suitable for connection to 90-264 Vac or 24Vac/dc, 50/60 Hz, power supply mains. It is the user's responsibility to provide a switch and non-time delay (North America), quick-acting, high breaking capacity, Type F, (Europe) 1/2 A, 250 V fuse(s) or circuit-breaker for 90-264V; or 1A, 125V fuse or circuit breaker for 24Vac/dc operation, as part of the installation. The switch or circuit-breaker shall be located in close proximity to the controller, within easy reach of the OPERATOR. The switch or circuit-breaker shall be marked as the disconnecting device for the controller. ($4mm^2$).

CAUTION Applying 90-264Vac to a controller rated for 24Vac/dc will severly damage the controller and is a fire and smoke hazard.

Figure 2-5 shows the wiring connections for line voltage.

Figure 2-5 Line Voltage Wiring

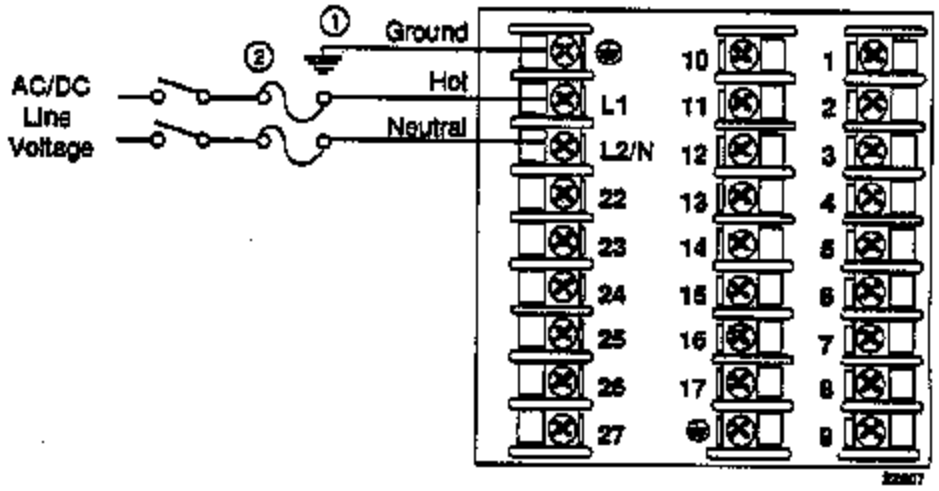

① PROTECTIVE BONDING (grounding) of this controller and the enclosure in which it is installed, shall be in accordance with National and local electrical codes. To minimize electrical noise and transients that may adversely affect the system, supplementary bonding of the controller enclosure to a local ground, using a No. 12 (4mm²) copper conductor, is recommended.

② Provide a switch and non-time delay (North America), quick-acting, high breaking capacity, Type F, (Europe) 1/2 A, 250 V fuse(s) or circuit-breaker for 90-264V; or 1A, 125V fuse or circuit breaker for 24Vac/dc operation, as part of the installation.

Continued on next page

Input #1 connections Figure 2-6 shows the wiring connections for Input #1.

Figure 2-6 Input #1 Connections

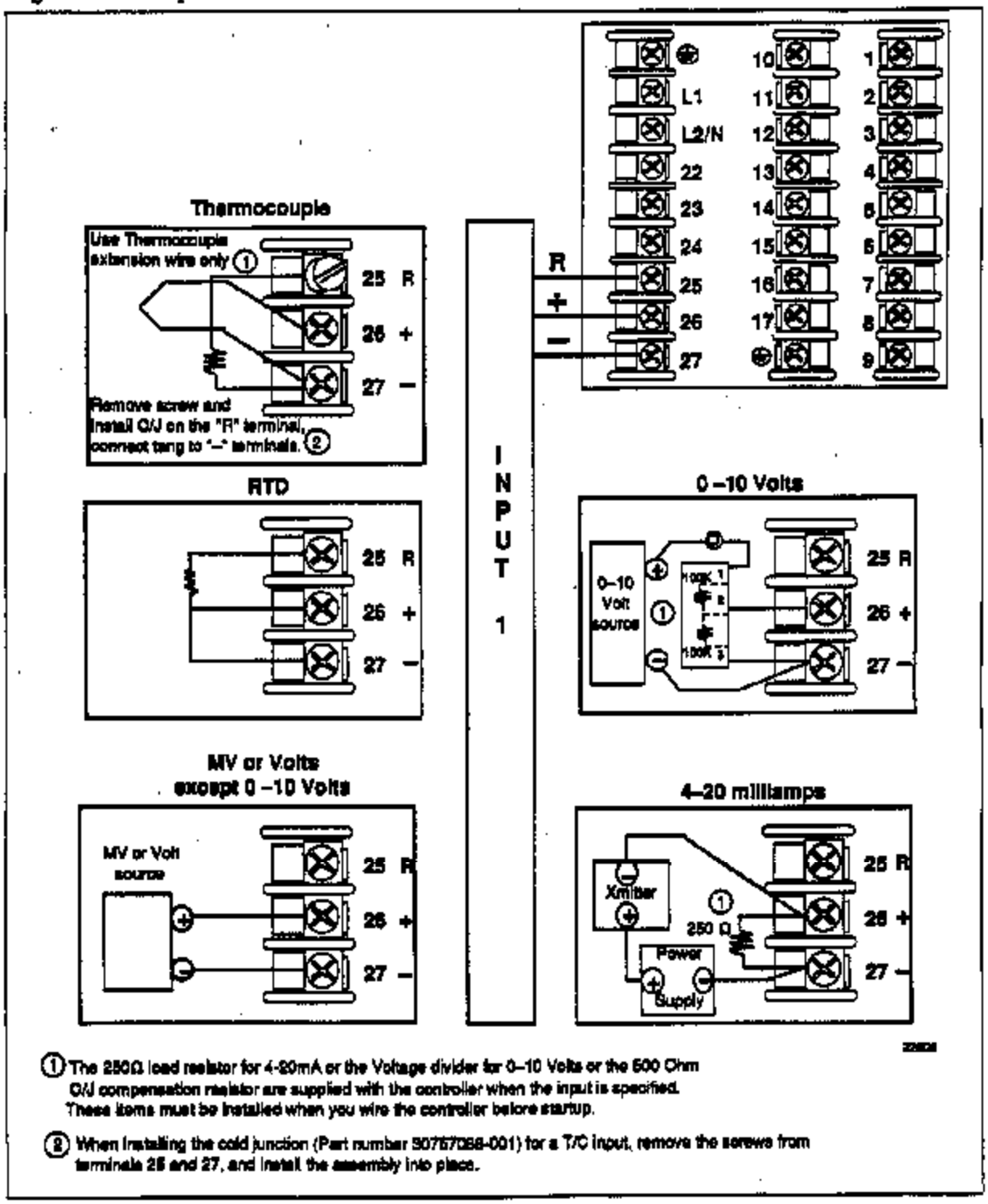

① The 250Ω load resistor for 4-20mA or the Voltage divider for 0–10 Volts or the 500 Ohm C/J compensation resistor are supplied with the controller when the input is specified. These items must be installed when you wire the controller before startup.

② When installing the cold junction (Part number 30757088-001) for a T/C input, remove the screws from terminals 25 and 27, and install the assembly into place.

Continued on next page

Input #2 connections Figure 2-7 shows the wiring connections for Input #2.

Figure 2-7 Input #2 Connections

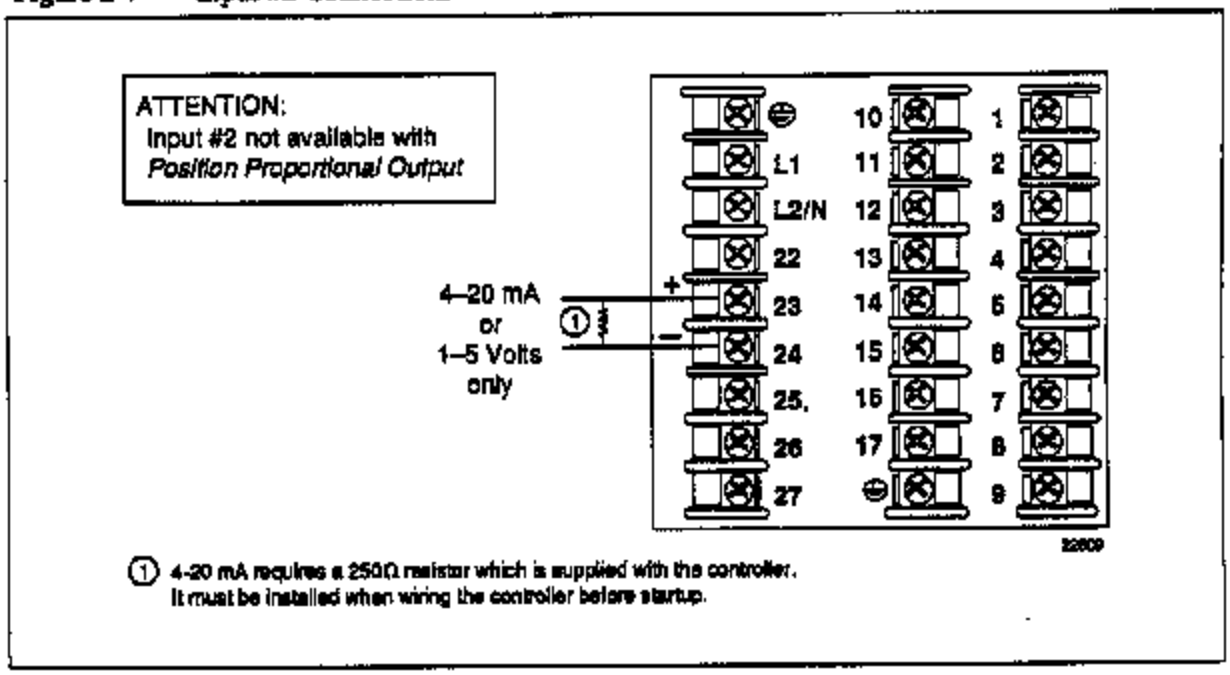

Continued on next page

Relay output

There are three types of relay outputs available on the UDC 3000.
- Electromechanical Relay Output (Model DC300E-E-XXX)– Figure 2-8
- Solid State Relay Output (Model DC300A-A-XXX) – Figure 2-9
- Open Collector Output (Model DC300T-T-XXX– Figure 2-10

The Alarm wiring connections are the same for all three outputs.
For Control and Alarm Relay Contact Information, see Tables 2-3 and 2-4.
Figure 2-8 shows the Output and Alarm wiring connections for models with Electromechanical Relay Output.

Figure 2-8 Electromechanical Relay Output - Model DC300E-E-XXX

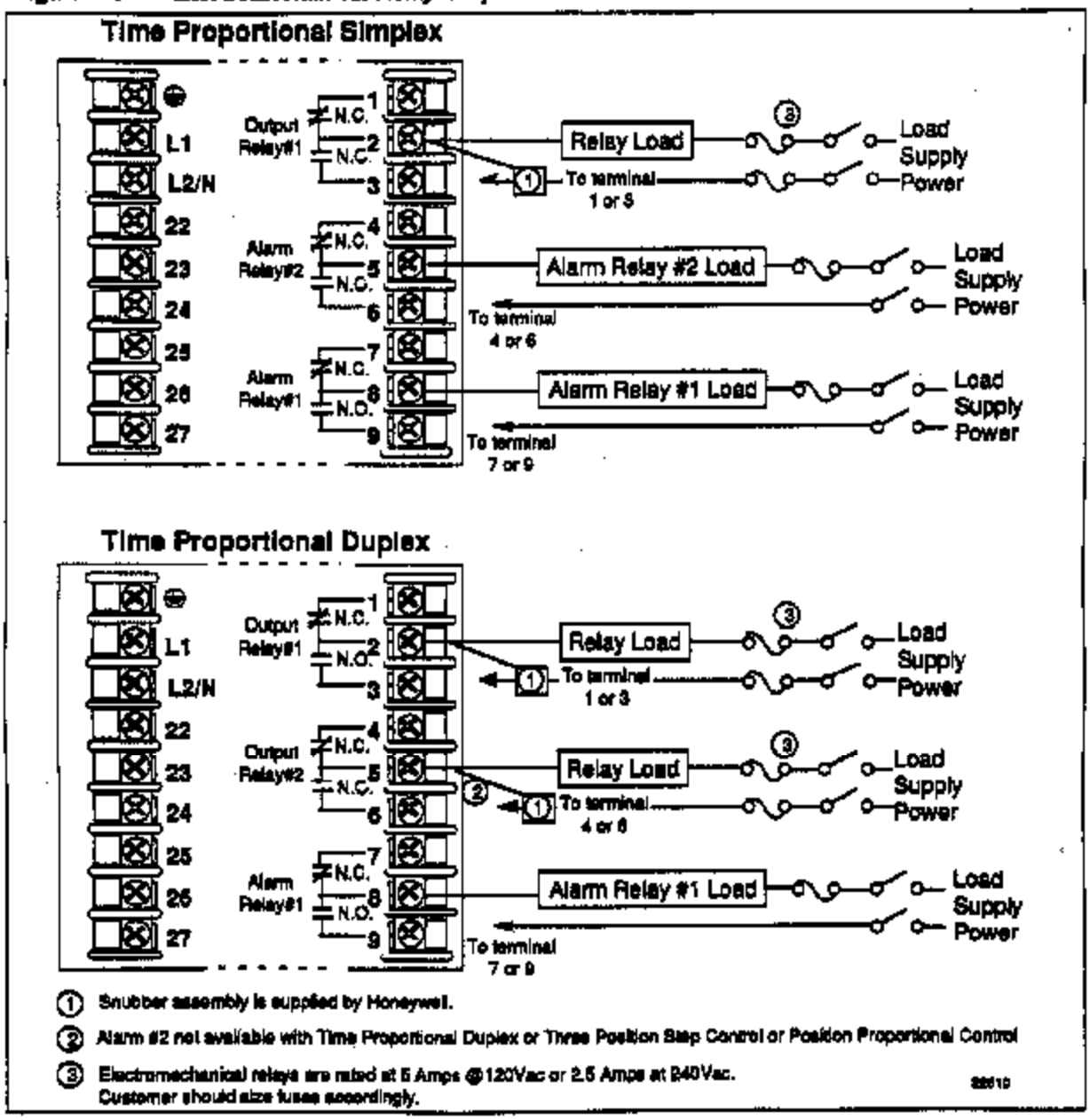

Continued on next page

Relay output (continued)

Figure 2-9 shows the Output and Alarm wiring connections for models with Solid State Relay Output.(Model DC300A-A-XXX)

For Control and Alarm Relay Contact information, see Tables 2-3 and 2-4.

Figure 2-9 Solid State Relay Output - Model DC300A-A-XXX

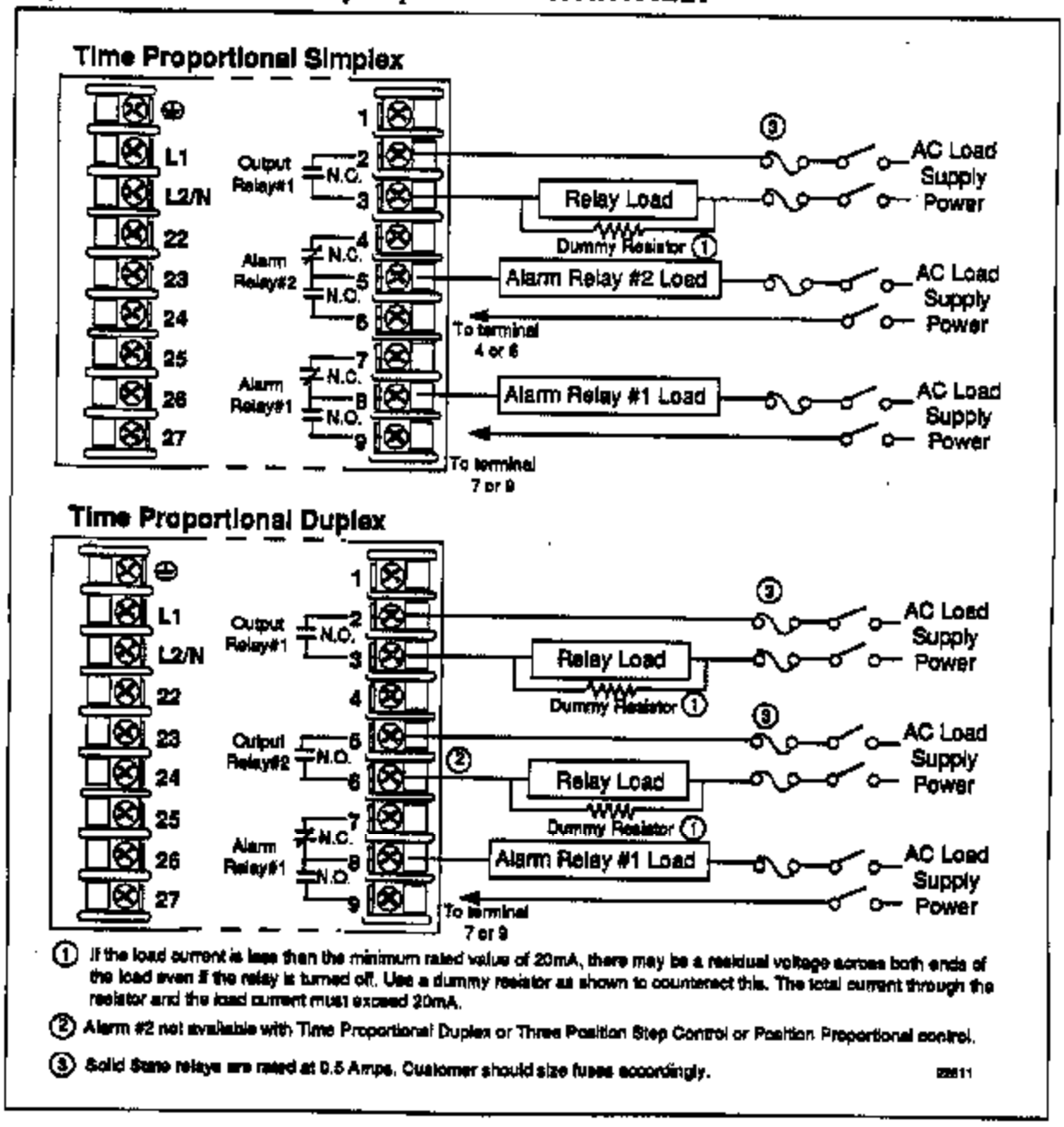

Continued on next page

Relay Output (continued)

Figure 2-10 shows the Output and Alarm wiring connections for models with Open Collector Output.(DC300T-T-XXX)

For Control and Alarm Relay Contact information, see Tables 2-3 and 2-4.

Figure 2-10 Open Collector Output - Model DC300T-T-XXX

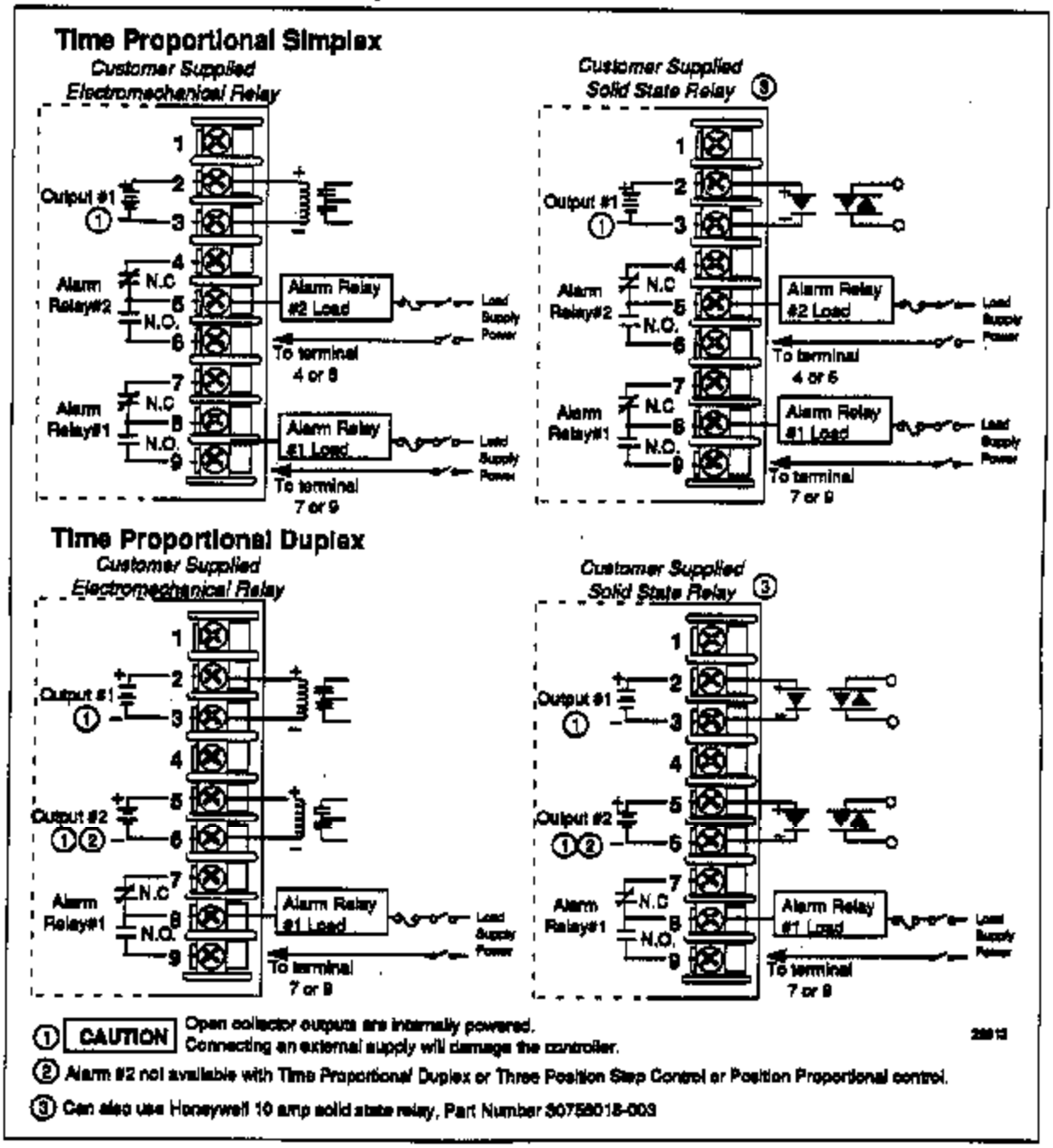

Continued on next page

Current output connections

Figure 2-11 shows the Output and Alarm wiring connections for models with Current Output. (Model DC300K-E-XXX)

For Control and Alarm Relay Contact Information, see Tables 2-3 and 2-4.

Figure 2-11 Current Output, Current /Time Duplex, Time/Current Duplex, Position Proportional, or Three Position Step Control

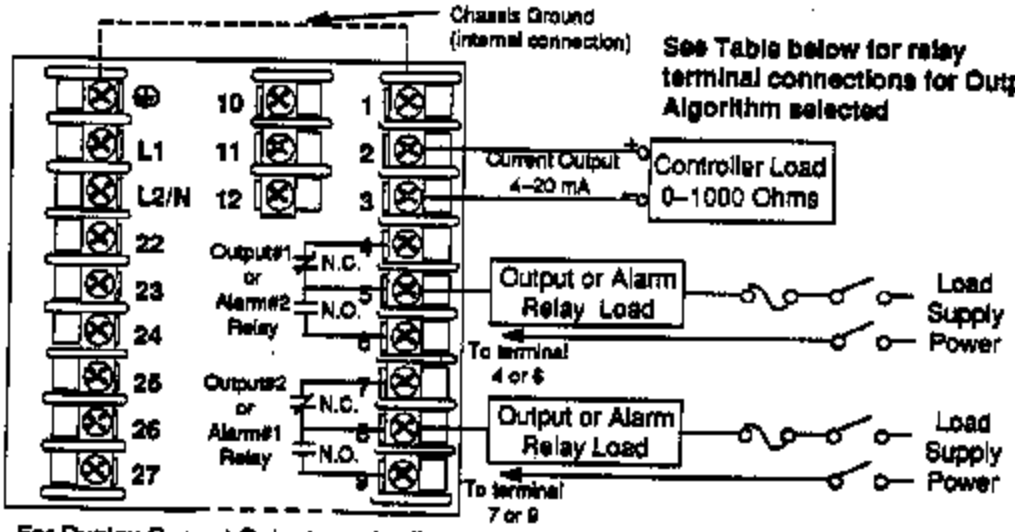

For Duplex Current Output use Auxiliary Output for Output 2 (cool)

Attention:

Both current outputs (control and auxiliary) are isolated from each other, case ground, and all inputs.

22817

Output Algorithm Selected	Terminal #2, #3	Relay Terminals #4,#5,#6	Relay Terminals #7, #8, #9
TIME	None	Output #1 or #2	Alarm #1
CURRENT	Current Output	Alarm #2	Alarm #1
POSITION	None	Output #1	Output #2
TIME DUPLEX	None	Output #1	Output #2
CURRENT DUPLEX	Current Output #1	Alarm #2	Alarm #1
CURRENT TIME or TIME CURRENT	Current Output	Output #1 or #2	Alarm #1

Continued on next page

Position proportional output connections

Figure 2-12 shows the Output and Alarm wiring connections for models with Position Proportional Output or Three Position Step Control.

For Control and Alarm Relay Contact Information, see Tables 2-3 and 2-4.

Calibration

Position Proportional Output or *Three Position Step* models must have the output calibrated after installation (see *Section 8—Position Proportional Output Calibration*) to ensure that the displayed output (slidewire position) agrees with the actual final control element position.

Three Position Step models only require that the motor time be entered. Full calibration is not required.

Figure 2-12 Position Proportional Output or Three Position Step-Models DC300E-E, DC300A-A

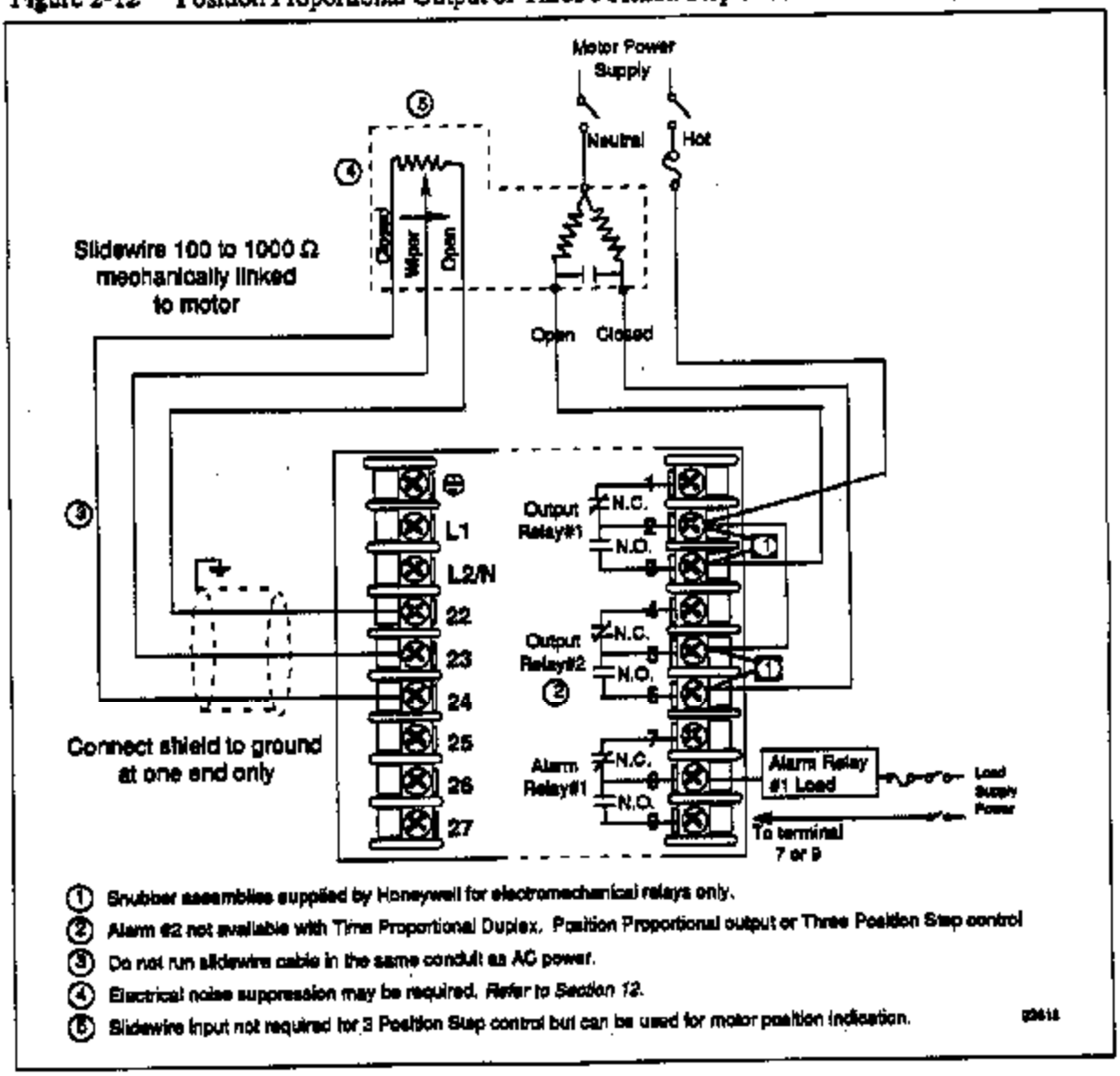

Continued on next page

Auxiliary output connections

Figure 2-13 shows the wiring connections for the Auxiliary Output option.

Figure 2-13 Auxiliary Output Connections

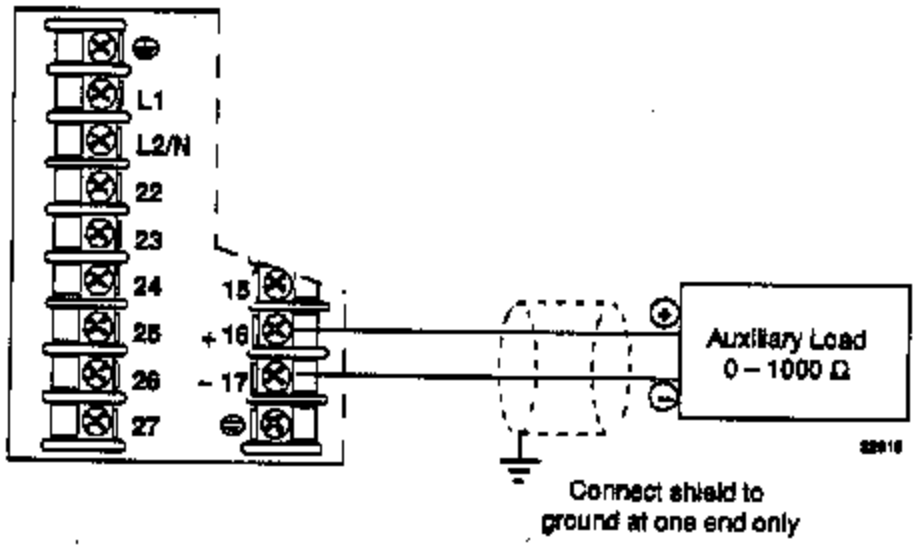

For Duplex Current Output use Control Output for Output 1 (heat)
Attention:
Both current outputs (control and auxiliary) are isolated from each other, case ground, and all inputs.

Continued on next page

Digital Inputs connections

Figure 2-14 shows the wiring connections for the Digital Inputs option.

Figure 2-14 Digital Inputs Connections

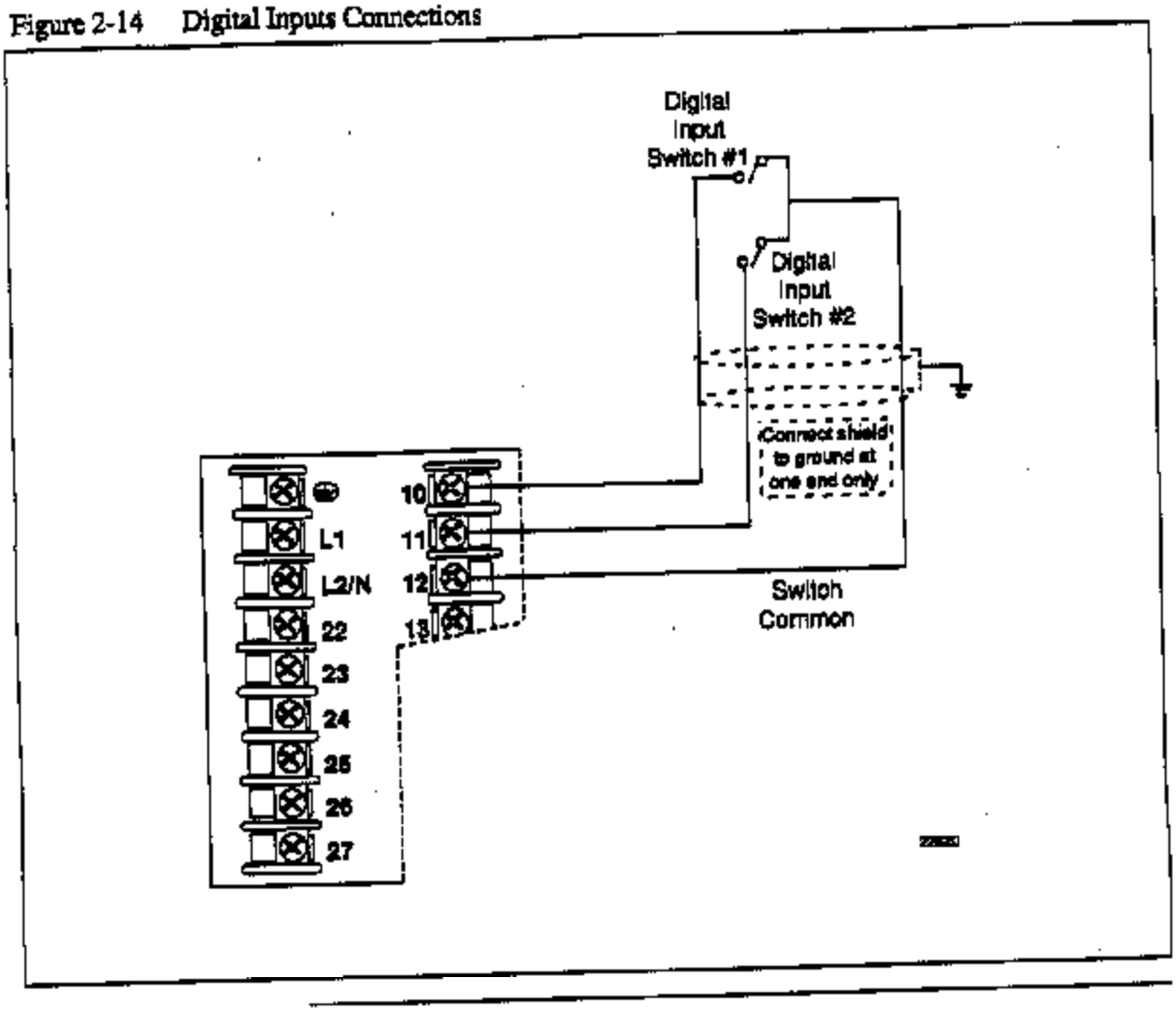

Continued on next page

Communications option connections

There are two types of Communications option available:
- RS422/485 - Figure 2-15 (also refer to Document # 51-51-25-35)
- DMCS - Figure 2-16 (also refer to Document # 82-50-10-23)

Figure 2-15 RS422/485 Communications Option Connections

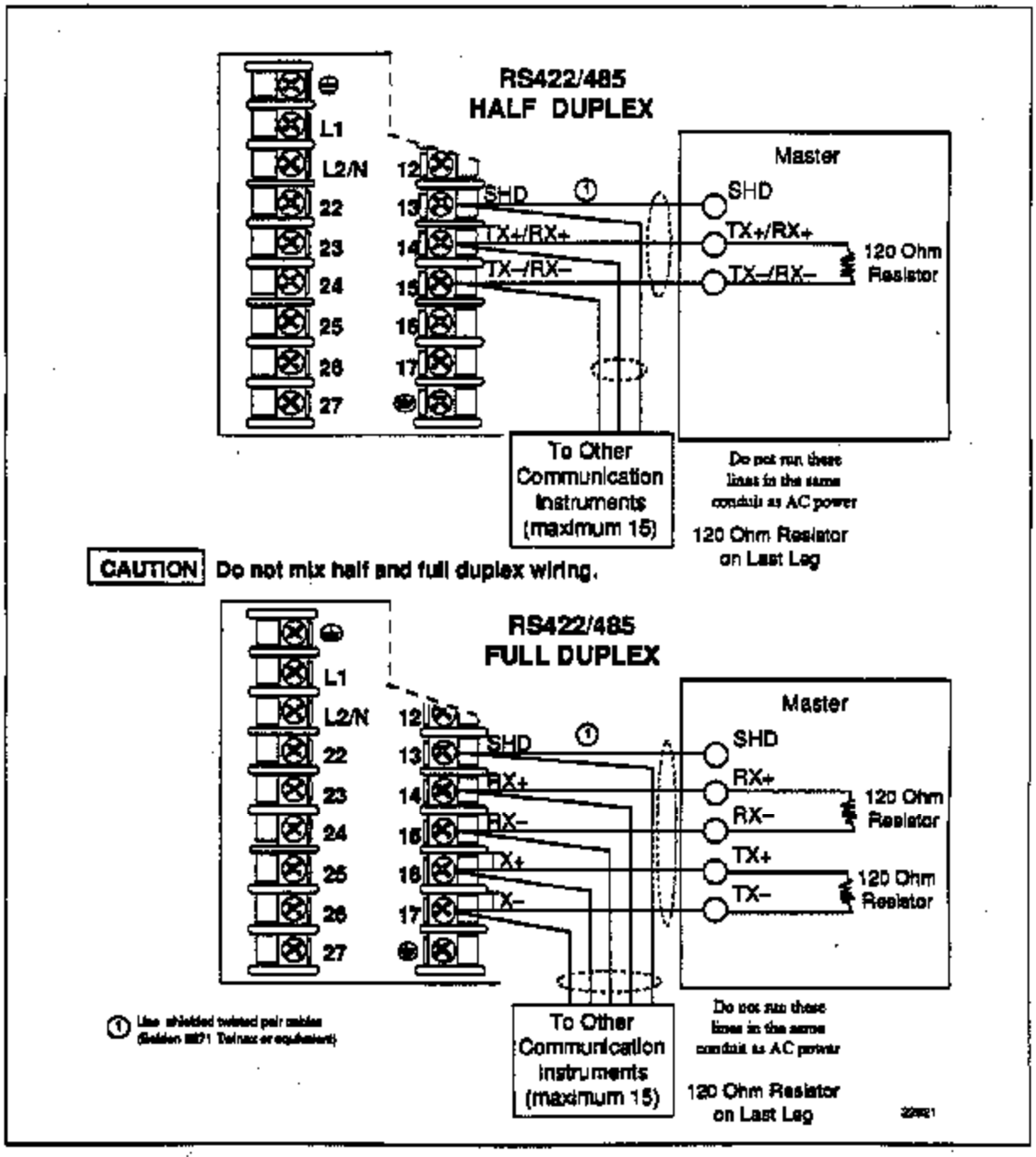

Continued on next page

Communications option connections (continued)

Figure 2-16 shows the wiring connections for the DMCS Communications Option. (also refer to Document # 82-50-10-23)

Figure 2-16 DMCS Communications Option Connections

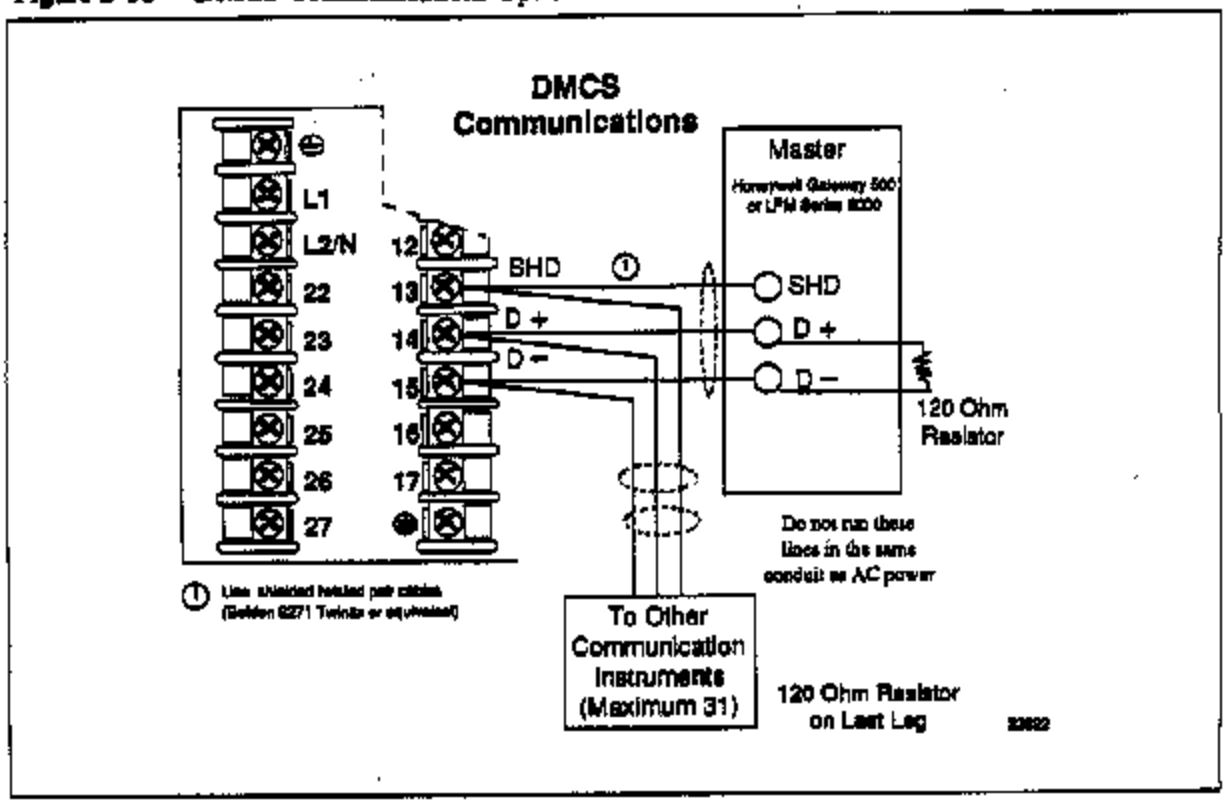

Continued on next page

Transmitter power for 4-20 mA 2-wire transmitter—open collector alarm 2 output

The wiring diagram example shown in Figure 2-17 provides 30 Vdc at terminals 5 and 6 with the capability of driving up to 22 mA, as required by the transmitter which is wired in series.

If the transmitter terminal voltage must be limited to less than 30 volts, you can insert a zener diode between the positive transmitter terminal and terminal no. 5. For example, an IN4733A zener diode will limit the voltage at the transmitter to 25 Vdc.

Configure:
A2S1TYPE = NONE
A2S2TYPE = NONE

Figure 2-17 Transmitter Power for 4-20 mA 2-wire Transmitter Using Open Collector Alarm 2 Output

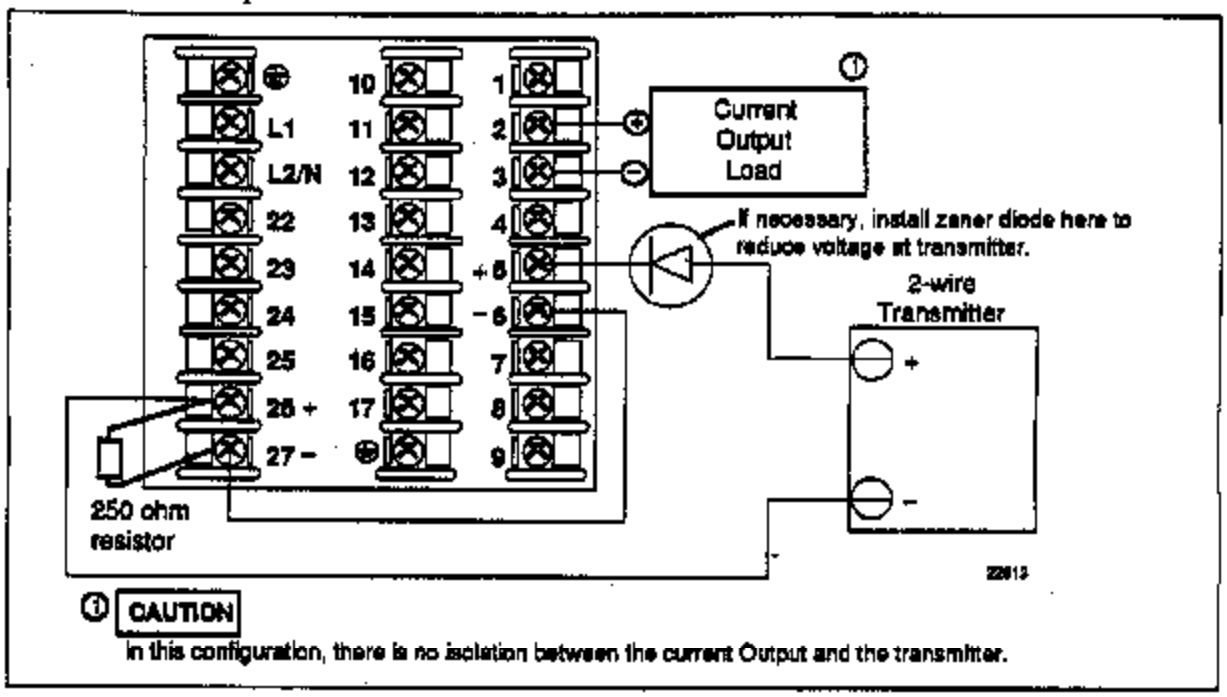

Continued on next page

Transmitter power for 4-20 mA 2-wire transmitter—auxiliary output

The wiring diagram example shown in Figure 2-18 provides 34 Vdc at terminal no. 16 with the capability of driving up to 22 mA, as required by the transmitter which is wired in series.

If the transmitter terminal voltage must be limited to less than 34 volts, you can insert a zener diode between the positive transmitter terminal and terminal no. 16. For example, an IN4739A zener diode will limit the voltage at the transmitter to 25 Vdc.

Configure:
AUX OUT = OUTPUT

Calibrate the Auxiliary Output using the procedure given in Section 8.4 – Auxiliary Output Calibration.
ZERO VAL = 4095
SPAN VAL = 4095

Figure 2-18 Transmitter Power for 4-20 mA 2-wire Transmitter Using Auxiliary Output

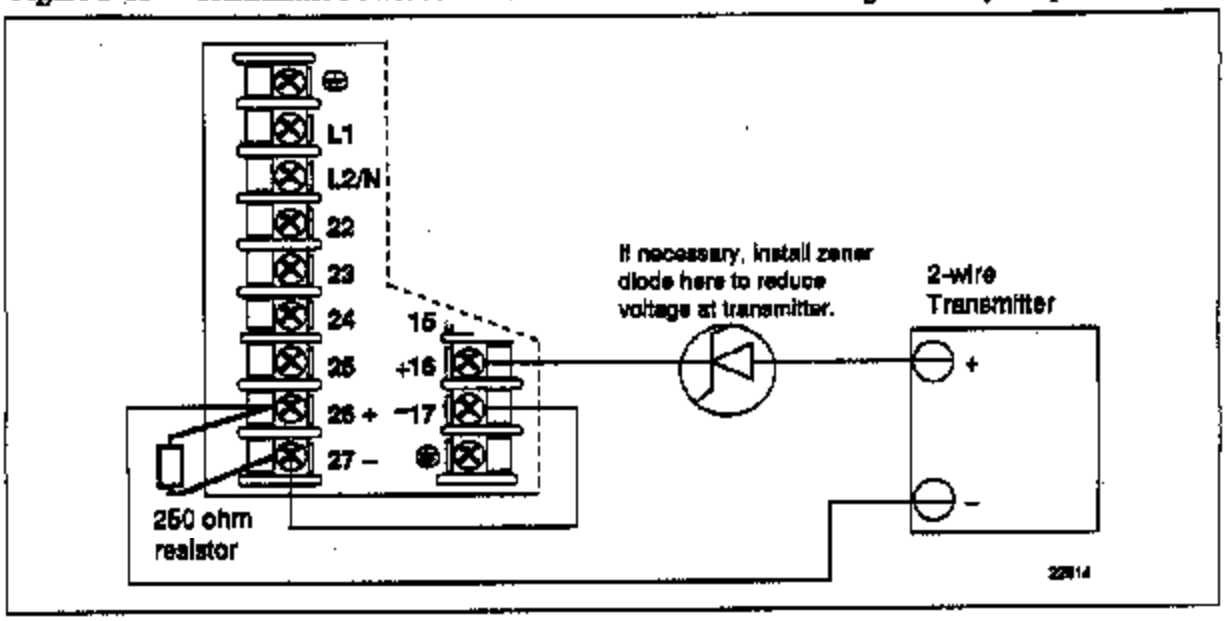

2.6 Control and Alarm Relay Contact Information

Control Relays

Table 2-3 lists the Control Relay Contact information.

ATTENTION Control relays operate in the standard control mode. i.e. Energized when output state is on.

Table 2-3 Control Relay Contact Information

Unit Power	Control Relay Wiring	Control Relay Contact	#1 or #2 Output Indicator Status
Off	N.O.	Open	Off
	N.C.	Closed	
On	N.O.	Open Closed	Off On
	N.C.	Closed Open	Off On

Alarm Relays

Table 2-4 lists the Alarm Relay Contact information.

ATTENTION Alarm relays are designed to operate in a failsafe mode. i.e. De-energized during alarm state. This results in alarm actuation when power is OFF or when initially applied, until the unit completes self diagnostics. If power is lost to the unit, the alarms will function.

Table 2-4 Alarm Relay Contact Information

Unit Power	Alarm Relay Wiring	Variable NOT in Alarm State		Variable in Alarm State	
		Relay Contact	Indicators	Relay Contact	Indicators
Off	N.O.	Open	Off	Open	Off
	N.C.	Closed		Closed	
On	N.O.	Closed	Off	Open	On
	N.C.	Open		Closed	

Section 3 – Configuration

3.1 Overview

Introduction

Configuration is a dedicated operation where you use straightforward keystroke sequences to select and establish (configure) pertinent control data best suited for your application.

What's in this section?

The table below lists the topics that are covered in this section.

Topic		See Page
3.1	Overview	29
3.2	Configuration Prompts	30 & 31
3.3	How to Get Started	32
3.4	Configuration Tips	33
3.5	Configuration Procedure	34
3.6	Timer Group	36
3.7	Tuning Parameters Setup Group	37
3.8	Setpoint Ramp/Program Setup Group	39
3.9	Adaptive Tune Setup Group	40
3.10	Algorithm Data Setup Group	41
3.11	Input 1 Parameters Setup Group	42
3.12	Input 2 Parameters Setup Group	44
3.13	Control Parameters Setup Group	45
3.14	Options Parameters Setup Group	47
3.15	Communications Parameters Setup Group	48
3.16	Alarms Parameters Setup Group	49
3.17	Calib Group	51
3.18	Status Group	51
3.19	Configuration Record Sheet	52

Prompts

To assist you in the configuration process, there are prompts that appear in the upper and lower displays. These prompts let you know what group of configuration data (Set Up prompts) you are working with and also, the specific parameters (Function prompts) associated with each group.

Figure 3-1 shows you an overview of the prompt hierarchy.
As you will see, the configuration data is divided into 11 main Set Up groups plus prompts for calibration and prompts that show the status of the continuous background tests that are being performed.

Continued on next page

3.2 Configuration Prompts

Diagram: prompt hierarchy

Figure 3-1 shows an overview of the UDC 3000 Set Up prompts and their associated Function prompts. - Read from left to right.

Figure 3-1 Overview of UDC 3000 Prompt Hierarchy

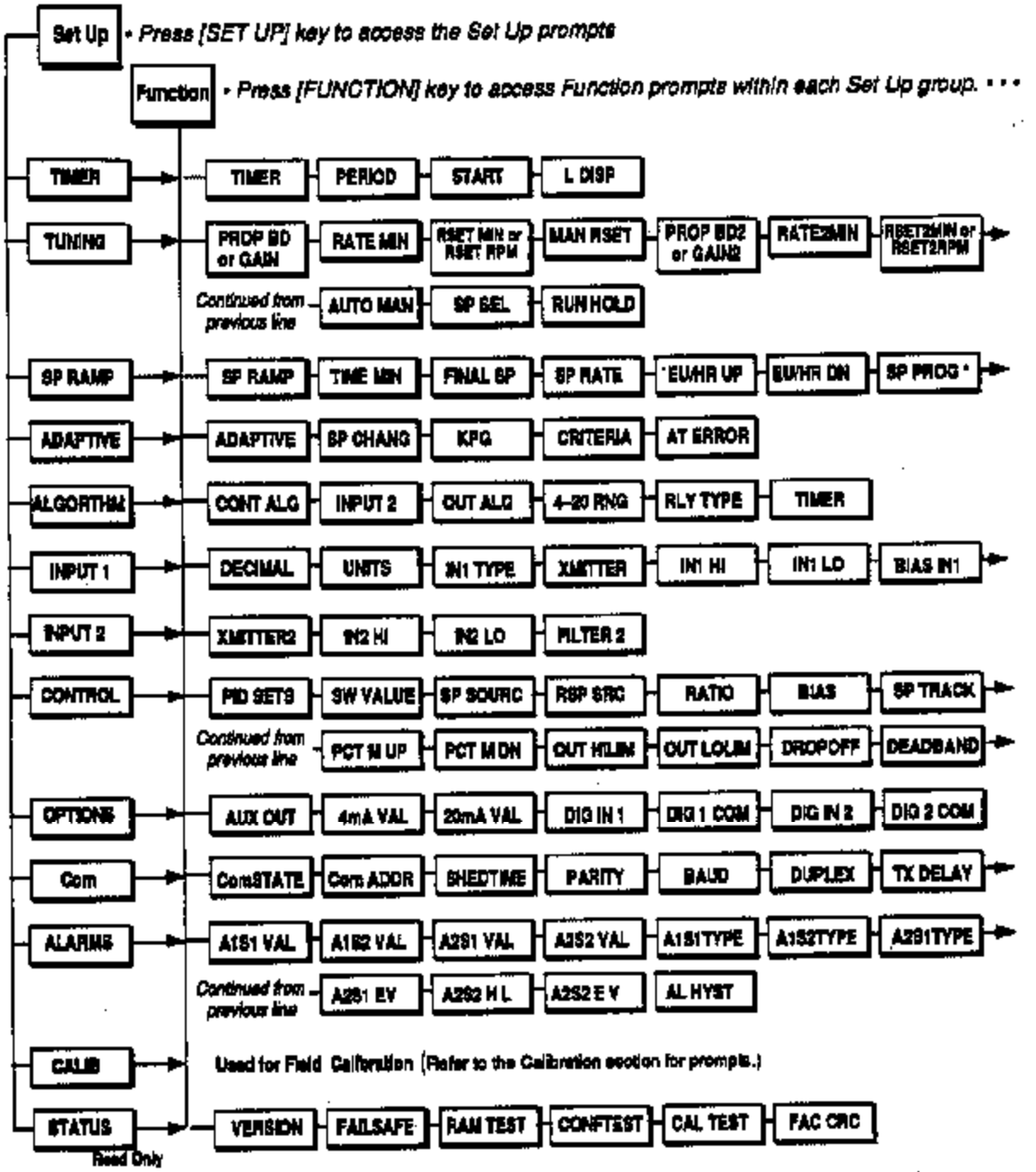

Continued on next page

*** *Press [▲] or [▼] to change the value or selection of the Function prompt.*

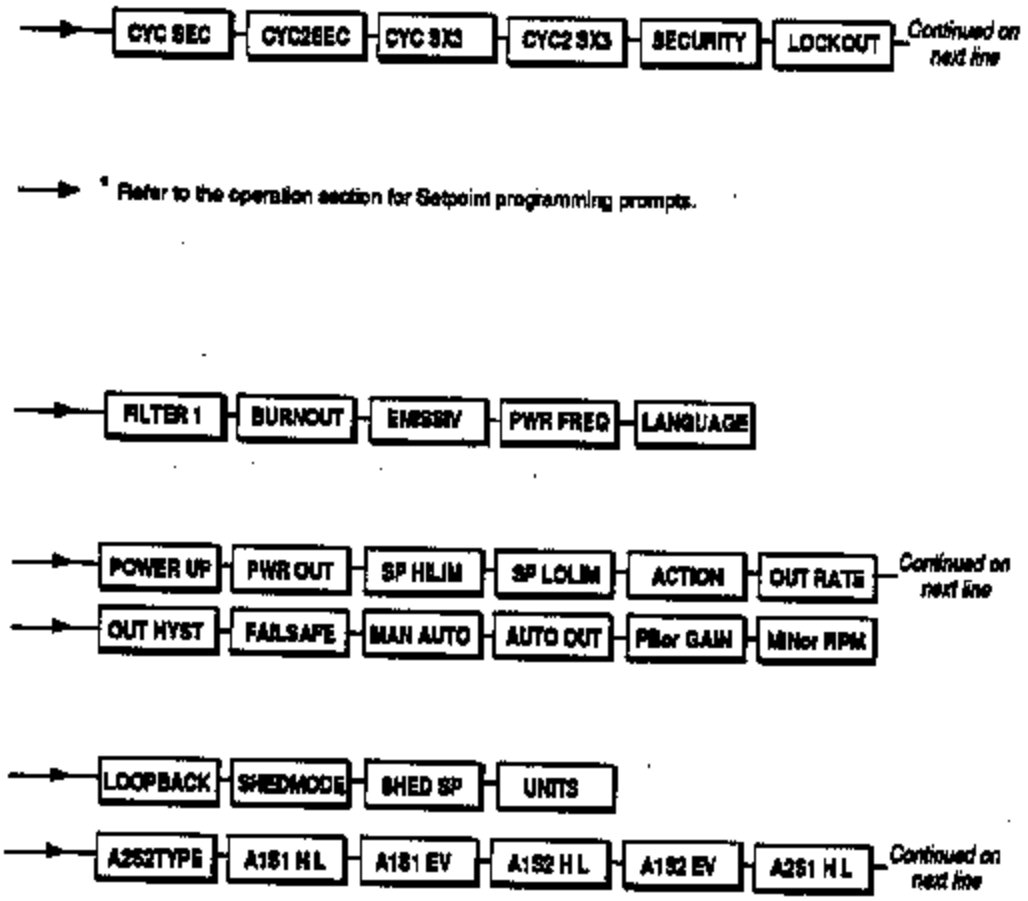

3.3 How To Get Started

Read the configuration tips	Read "*Configuration Tips*" shown on the next page. These tips will help you to easily and quickly accomplish the tasks at which you will be working when you configure your controller.
Read configuration procedure	Read "*Configuration Procedure*". This procedure tells you how to access the Set Up groups, and the Function parameters within each of these groups that are shown in the Prompt Hierarchy in Figure 3-1.
Set Up groups	The Set Up groups and Function parameters are listed in the order of their appearance. The list includes the name of the prompt, the range of setting or selections available, and the factory setting.
Parameter explanations or definitions	If you need a detailed explanation of any prompt listed, refer to *Section 4 – Configuration Parameter Definitions*. This section lists the Set Up and Function prompts, the selections or range of settings that you can make for each, plus a detailed explanation or definition of each parameter
Configuration record sheet	Located on the last page of this section is a "*Configuration Record Sheet*". When you make your configuration selections, record them on this sheet. Then you will have a record of how the controller was configured.

3.4 Configuration Tips

Introduction

Listed below in Table 3-1 are a few tips that will help you enter the configuration data more quickly.

Table 3-1 Configuration Tips

Function	Tip
Displaying Groups	Use the Set Up key to display the Set Up groups. The group titles are listed in this section in the order that they appear in the controller.
Displaying Functions	Use the Function key to display the individual parameters under each group. The prompts are listed in the order of their appearance in each group.
Scrolling	To get to a Set Up group prompt more quickly, hold the Set Up key in. To get to a Function prompt more quickly, hold the Function key in. The display will scroll through the parameters. ATTENTION The prompting scrolls at a rate of 2/3 seconds when the Set Up or Function key is held in. Also, [▲] [▼] keys will move group prompts forward or backward at a rate twice as fast.
Changing values quickly	When Changing the value of a parameter, you can adjust a more significant digit in the upper display by holding in one key [▲] or [▼] , and pressing the other [▲] or [▼] at the same time. The adjustment will move one digit to the left. Press the key again and you will move one more digit to the left.
Restoring to the original value	When you change the value or selection of a parameter while in Set Up mode and decide not to enter it, press Run/Hold once, the original value or selection will be recalled.
Exiting SET UP mode	To exit Set Up mode, press the Lower Display key. This returns the display to the same state it was in immediately preceding entry into the Set Up mode.
Timing out from Set Up mode	If you are in Set Up mode and do not press any keys for one minute, the controller will time out and revert to the mode and display that was being used prior to entry into Set Up mode.
Key Error	When a key is pressed and the prompt "KEY ERROR" appears in the lower display, it will be for one of the following reasons: • parameter not available • not in Set Up mode, press Set Up key first • key malfunction, do keyboard test (operation) • individual key looked out

3.5 Configuration Procedure

Introduction

Each of the Set Up groups and their functions are pre-configured at the factory.
The factory settings are shown in the Set Up group tables that follow this procedure.
If you want to change any of these selections or values, follow the procedure in Table 3-2. This procedure tells you the keys to press to get to any Set Up group and any associated Function parameter prompt.
If you need a detailed explanation of any prompt, refer to *Section 4 – Configuration Parameter Definitions.*

Procedure

Follow the procedure listed in Table 3-2 to access the Set Up groups and Function prompts.

ATTENTION The prompting scrolls at a rate of 2/3 seconds when the Set Up or Function key is held in. Also, [▲] [▼] keys will move group prompts forward or backward at a rate twice as fast.

Table 3-2 Configuration Procedure

Step	Operation	Press	Result
1	Select Set Up mode	SET UP	Upper Display: SET UP — Lets you know you are in the configuration mode and a Set Up group title is being displayed in the lower display. Lower Display: TUNING * — This is the first Set Up group title. *"Timer" will appear if enabled.
2	Select any Set Up group	SET UP	Successive presses of the Set Up key will sequentially display the other Set Up group titles shown in the prompt hierarchy in figure 3-1. You can also use the [▲] [▼] keys to scan the Set Up groups in both directions. Stop at the Set Up group title which describes the group of parameters you want to configure. Then proceed to the next step.
3	Select a Function Parameter	FUNCTION	Upper Display: 1.0 — Shows you the current value or selection for the first function prompt of the particular Set Up group that you have selected. Lower Display: GAIN — Shows the first Function prompt within that Set Up group. Example displays show Set Up group "Tuning", Function prompt "Gain" and the value selected.

Continued on next page

Procedure (continued)

Table 3-2 Configuration Procedure, continued

Step	Operation	Press	Result
4	Select other Function Parameters	FUNCTION	Successive presses of the Function Key will sequentially display the other function prompts of the Set Up group you have selected. Stop at the function prompt that you want to change, then proceed to the next step.
5	Change the value or selection	▲ or ▼	These keys will increment or decrement the value or selection that appears for the function prompt you have selected. See "Configuration Tips" for instructions to increase or decrease value quickly. Change the value or selection to meet your needs. If the display flashes, you are trying to make an unacceptable entry.
6	Enter the value or selection	FUNCTION or SET UP	This key selects another function prompt. This key selects another Set Up group. The value or selection you have made will be entered into memory after another key is pressed.
7	Exit Configuration	LOWER DISPLAY	This exits configuration mode and returns the controller to the same state it was in immediately preceding entry into the Set Up mode. It stores any changes you have made.

3.6 Timer Parameters Set Up Group

Introduction

The Timer Set Up group, when enabled, allows you to

- set a timeout period configurable from 0 to 99 hrs:59 minutes,
- select the start of the timer as either the RUN/HOLD key or alarm 2,
- select the lower display to indicate time remaining or elapsed time.

This group appears only if enabled in Set Up group "ALGORTHM".

Function prompts

Table 3-3 lists all the function prompts in the Timer Set Up group.

Table 3-3 Timer Group Function Prompts

Function Prompt (Lower Display)	Function Name	Selections or Range of Setting (Upper Display)	Factory Setting
TIMER	Timer Enable/Disable	ENABLE DISABL	DISABLE
PERIOD	Timeout Period	0:00 to 99:59	0.01
START	Start Initiation	KEY ALARM 2	KEY
L DISP	Lower Display Selection	TI REM (time remaining) E TIME (elapsed time)	TI REM

3.7 Tuning Parameters Set Up Group

Introduction

The Tuning Set Up group contains the Function parameters that will allow your controller to respond correctly to changes in process variable or setpoint.

You can start with predetermined values but you will have to watch your process to determine how to modify them.

If you have the Adaptive Tune option, this will automatically select Gain, Rate, and Reset values.

Set this group last

Because this group contains functions that have to do with Security and Lockout, it is best to configure this group last, after all the other configuration data has been loaded.

Continued on next page

Function prompts

Table 3-4 lists all the function prompts in the Tuning Set Up group. How the "Algorithm" and "Control" Set Up groups are configured determines which prompts will appear.

Table 3-4 Tuning Group Function Prompts

Function Prompt (Lower Display)	Function Name	Selections or Range of Setting (Upper Display)	Factory Setting
PROP BD or GAIN	Proportional Band, or Gain	0.1 to 999.9% 0.1 to 999.9	1.0
RATE MIN	Rate in Minutes	0.08 to 10.00 minutes	0.00
RSET MIN	Reset in minutes/repeat	0.02 to 50.00	1.0
RSET RPM	Reset in repeats/minute	0.02 to 50.00	1.0
MAN RSET	Manual Reset	–100 to 100% Output	0.0
PROP BD2 or GAIN 2	Proportional Band 2, or Gain 2	0.1 to 999.9% 0.1 to 999.9	5.0
RATE2MIN	Rate 2 in Minutes	0.08 to 10.00 minutes	0.00
RSET2MIN	Reset 2 in minutes/repeat	0.02 to 50.00	0.2
RSET2RPM	Reset 2 in repeats/minute	0.02 to 50.00	0.2
CYC SEC	Cycle Time (Heat) Electromechanical Relays	1 to 120 seconds	20.0
CYC2 SEC	Cycle Time 2 (Cool) Electromechanical Relays	1 to 120 seconds	20.0
CYC SX3	Cycle Time(Heat) Solid State Relays	1 to 120 (1/3 second increments) 1 = .33 Sec. 120 = 40 Sec	20.0
CYC2SX3	Cycle Time(Cool) Solid State Relays	1 to 120 (1/3 second increments) 1 = .33 Sec. 120 = 40 Sec	20.0
SECURITY	Security Code	0 to 4095	
LOCKOUT	Configuration Lockout	NONE CALIB +CONF +VIEW MAX	CALIB
AUTO MAN *	Manual/Auto Key Lockout	DISABL ENABLE	ENAB
SP SEL *	Setpoint Select Key Lockout	DISABL ENABLE	ENAB
RUN HOLD *	Run/Hold key Lockout	DISABL ENABLE	ENAB

*Only appears if LOCKOUT = NONE.

3.8 SP Ramp/Program Set Up Group

Single Setpoint Ramp

The Setpoint Ramp Set Up group contains the Function parameters that let you to configure a single set point ramp to occur between the current local setpoint and a final setpoint over a time interval (SP RAMP).

Setpoint rate

The Setpoint Ramp Set Up group also contains the function parameters that let you configure a specific rate of change for any Local Setpoint change (SP RATE). It includes selections for Rate Up and Rate Down.

Setpoint Program

Also included under this group are prompts for configuring a Setpoint program (SP PROG). The prompts and instructions for Setpoint programming are in the *Operation* section.

Function prompts

Table 3-5 lists all the function prompts in the SP RAMP Set Up group.

Table 3-5 SP Ramp Group Function Prompts

Function Prompt Lower Display	Function Name	Selections or Range of Setting Upper Display	Factory Setting
SP RAMP	Single Setpoint Ramp Selection	DISABL ENABLE	DISABL
TIME MIN	Single Setpoint Ramp Time	0 to 255 minutes	3
FINAL SP	Single Setpoint Final Setpoint	Enter a value within the setpoint limits	
SP RATE	Setpoint Rate	DISABL ENABLE	DISABL
EU/HR UP	Rate Up Value (SP Rate Enabled)	0 to 9999 in Units per Hour	
EU/HR DN	Rate Down Value (SP Rate Enabled)	0 to 9999 in Units per Hour	
SP PROG	Setpoint Programming	DISABL ENABLE	DISABL

3.9 Adaptive Tune Set Up Group

Adaptive Tune

Adaptive Tune continuously adjusts the PID parameters in response to setpoint changes. You can select tuning on minimum setpoint changes of 5% up to 15% span. Perform adaptive tuning after you have configured the controller.
Adaptive Tune does not work with 3 Position Step Control algorithm.

Function prompts

Table 3-6 lists all the function prompts in the "ADAPTIVE" Set Up group.

Table 3-6 Adaptive Tune Group Function Prompts

Function Prompt (Lower Display)	Function Name	Selections or Range of Setting (Upper Display)	Factory Setting
ADAPTIVE *	Adaptive Tune	DISABLE SPoNLY	Disabl
SP CHANG	Setpoint Change	5 to 15% Input Span	10
KPG	Process Gain	0.10 to 10.00 (Normally Read Only)	1.0
CRITERIA	Tuning Criteria	NORMAL FAST	FAST
AT ERROR	Adaptive Tune Error codes	Read Only NONE OUT LIM ID FAIL ABORT LOW PV RUNING	

* ADAPTIVE TUNE DOES NOT WORK WITH 3 POSITION STEP CONTROL ALGORITHM

3.10 Algorithm Data Set Up Group

Introduction

This data deals with various algorithms residing in the controller: Control Algorithm and Output algorithms, enabling the Second Input or the Current Duplex range, and selecting the type of relay.

Function prompts

Table 3-7 lists all the function prompts in the "ALGORITHM" Set Up group.

Table 3-7 Algorithm Group Function Prompts

Function Prompt (Lower Display)	Function Name	Selections or Range of Setting (Upper Display)	Factory Setting
CONT ALG	Control Algorithm	ON-OFF* PID A PID B PD+MR 3PSTEP*	PID A
INPUT 2	Input 2	ENABLE DISABL	DISABL
OUT ALG**	Output Algorithm	TIME CURRNT POSITN TIME D CUR D CUR TI TI CUR	Depends on model
4–20RNG	Current Duplex Range (CUR D)	100PCT (FULL) 50 PCT (SPLIT)	50PCT
RLY TYPE*	Output Relay Type	MECHAN SOL ST	MECHAN
TIMER	Timer Group Enable/Disable	ENABLE DISABL	DISABL

* For Time Proportional only. Prompt appears only if LOCKOUT=NONE

** Selections are model dependent. For example, current output models cannot be configured for Time Proportioning Simplex Output.

3.11 Input 1 Parameters Set Up Group

Introduction

This data deals with various parameters required to configure Input 1.

Function prompts

Table 3-8 lists all the function prompts in the "INPUT 1" Set Up group.

Table 3-8 Input 1 Group Function Prompts

Function Prompt (Lower Display)	Function Name	Selections or Range of Setting (Upper Display)	Factory Setting
DECIMAL	Decimal Point Location	XXXX None XXX.X One XX.XX Two	XXXX
UNITS	Temperature Units	DEG F DEG C NONE	NONE
IN1 TYPE	Input 1 Actuation Type	B TC E TC H E TC L J TC H J TC L K TC H K TC L NNM TC H NNM TC L NIC TC R TC S TC T TC H T TC L W TC H W TC L 100 PT 100 LO 500 PT RADIAM 4-20mA 0-10mV 10-50m 1-5 V 0-10V	0-10mV
XMITTER	Transmitter Characterization	B TC E TC H E TC L J TC H J TC L K TC H K TC L NNM TC H NNM TC L NIC TC R TC S TC T TC H T TC L W TC H W TC L 100 PT 100 LO 500 PT RADIAM LINEAR SQROOT	LINEAR
IN1 HI	Input 1 High Range Value (Linear Inputs only	–999.0 to 9999. in engineering units	1000
IN1 LO	Input 1 Low Range Value (Linear Inputs only)	–999.0 to 9999. in engineering units	0

Continued on next page

Function prompts, continued

Table 3-8 lists all the function prompts in the "INPUT 1" Set Up group.

Table 3-8 Input 1 Group Function Prompts, continued

Function Prompt Lower Display	Function Name	Selections or Range of Setting Upper Display	Factory Setting
BIAS IN1	Input 1 Bias	–999.0 to 9999.	0
FILTER 1	Input 1 Filter	0 to 120 seconds	0
BURNOUT	Burnout Protection	NONE UP DOWN	NONE
EMISSIV	Emissivity	0.01 to 1.00	0
PWR FREQ	Power Line Frequency	60 Hz 50 Hz	60 Hz
LANGUAGE	Prompt Language	ENGLIS FRENCH GERMAN SPANIS ITALAN	ENGLIS

3.12 Input 2 Parameters Set Up Group

Introduction

This data deals with various parameters required to configure Input 2. This only appears when input 2 in the "Algorithm" Group is enabled.

Function prompts

Table 3-9 lists all the function prompts in the INPUT 2 Set Up group.

Table 3-9 Input 2 Group Function Prompts

Function Prompt Lower Display	Function Name	Selections or Range of Setting Upper Display	Factory Setting
XMITTER2	Transmitter Characterization	B TC E TC H E TC L J TC H J TC L K TC H K TC L NNM TC H NNM TC L NIC TC R TC S TC T TC H T TC L W TC H W TC L 100 PT 100 LO 500 PT RADIAM LINEAR SQROOT	LINEAR
IN2 HI	Input 2 High Range Value	–999.0 to 9999. In engineering units (Adjustable for linear inputs only)	1000
IN2 LO	Input 2 Low Range Value	–999.0 to 9999. In engineering units (Adjustable for linear inputs only)	0
FILTER 2	Input 2 Filter	0 to 120 seconds 0 = No Filter	0

3.13 Control Parameters Set Up Group

Introduction

This data deals with various parameters required to effectively control your process.

Function prompts

Table 3-10 lists all the function prompts in the "CONTROL" Set Up group.

Table 3-10 Control Group Function Prompts

Function Prompt (Lower Display)	Function Name	Selections or Range of Setting (Upper Display)	Factory Setting
PID SETS	Tuning Parameter Sets	1 ONLY 2KEYBD 2PV SW 2SP SW	1 ONLY
SW VALUE	Automatic Switchover Value	Value in Engineering Units	0.00
SP SOURC	Local Setpoint Source	1 LOCAL 2 LOCAL	1 LOCAL
RSP SRC	Remote Setpoint Source	NONE IN 2	NONE
RATIO	Ratio	–20.00 to 20.00	1.0
BIAS	Bias	–999.0 to 9999 in engineering units	0
SP TRACK	Local Setpoint Tracking	NONE PV RSP	NONE
POWER UP	Power Up Recall	MANUAL A LSP A RSP AM SP AM LSP	MANUAL
PWR OUT	Power Up Output	LAST F'SAFE ATTENTION This prompt will appear only if "3PSTEP" is selected at Set Up group "ALGORITHM", function prompt "CONT ALG".	LAST
SP HILIM	Setpoint High Limit	0 to 100% of span input in engineering units with decimal place.	1000
SP LOLIM	Setpoint Low Limit	0 to 100% of span input in engineering units with decimal place.	0
ACTION	Control Output Direction	DIRECT REVERSE	REVERSE

Table continued on next page

Function prompts, continued

Table 3-10 lists all the function prompts in the "CONTROL" Set Up group.

Table 3-10 Control Group Function Prompts, continued

Function Prompt (Lower Display)	Function Name	Selections or Range of Setting (Upper Display)	Factory Setting
OUT RATE	Output Change Rate ATTENTION Does not apply to 3 Position Step Control algorithm.	ENABLE DISABL	DISABL
PCT/M UP	Output Rate Up Value	0 to 9999% / minute	0
PCT/M DN	Output Rate Down Value	0 to 9999% / minute	0
OUTHILIM	High Output Limit	–5.0 to 105.0% of output	100.0
OUTLOLIM	Low Output Limit	–5.0 to 105.0% of output	0
DROPOFF	Controller Dropoff Value	–5.0 to 105.0% of output	0.0
DEADBAND	Output Relay Deadband	*Current Proportional Duplex or Time Proportional Duplex:* –5.0 to 25.0% *Position Proportional or Three Position Step:* 0.5 to 5.0%	2.0
OUT HYST	Output Relay Hysteresis	0.0 to 5.0%	0.5
FAILSAFE	Failsafe Output Value *For 3Pos. Step Control:* 100PCT 0PCT	Set within the range of the output limits. *For 3Pos. Step Control:* **100PCT** - Set motor position to 100% output position **0PCT** - Set motor position to 0% output position	0.0
MAN OUT	Power-up Manual Mode Output Preset Value	0.0 to 100.0%	0.0
AUTO OUT	Power-up Automatic Mode Output Preset Value	0.0 to 100.0%	0.0
PBorGAIN	Proportional Band or Gain Units	PB PCT GAIN	GAIN
MINorRPM	Reset Units	RPM MIN	MIN

3.14 Options Set Up Group

Introduction

This data deals with various options that are available with your controller. If your controller does not have any of these options the prompts will not appear.

Function prompts

Table 3-11 lists all the function prompts in the "Options" Set Up group.

Table 3-11 Options Group Function Prompts

Function Prompt Lower Display	Function Name	Selections or Range of Setting Upper Display	Factory Setting
AUX OUT	Auxiliary Output Representation	DISABL IN 1 IN 2 PV DEV OUTPUT SP LSP1	DISABL
4mA VAL	Auxiliary Output Low Scaling Factor	Low scale value to represent 4 mA. Value in % for output. All other in Engineering units.	0
20mA VAL	Auxiliary Output High Scaling Factor	High scale value to represent 20 mA. Value in % for output. All other in Engineering units.	0
DIG IN 1	Digital Input 1 selections	NONE To MAN To LSP To 2SP To DIR To HOLD ToPID2 PV 2IN To RUN To BEGN STOP I MAN FS To LOCK To A OUT TIMER AM STA	NONE
DIG1 COM	Digital Input 1 Combinations	DISABL +PID2 +TO DIR +TO SP2 +DISAT	DISABL
DIG IN 2	Digital Input 2 selections	Same as DIG IN 1	NONE
DIG 2 COM	Digital Input 2 Combinations	Same as DIG1 COM	DISABL

3.15 Communications Group

Introduction

This data deals with the Communications option that is available with your controller. This option allows the controller to be connected to a host computer via a RS422 or DMCS bus.

If your controller does not have this option the prompts will not appear.

Function prompts

Table 3-12 lists all the function prompts in the "Com" Set Up group.

Table 3-12 Com Group Function Prompts

Function Prompt (Lower Display)	Function Name	Selections or Range of Setting (Upper Display)	Factory Setting
ComSTATE	Communications Option State	DISABL DMCS RS422	DISABL
Com ADDR	Communications Station Address	1 to 99	0
SHEDTIME	Shed Time	1 to 255 sample periods	0
PARITY (RS422/485 Only)	Parity	ODD EVEN	ODD
BAUD (RS422/485 Only)	Baud Rate	300 4800 600 9600 1200 19200 2400	300
DUPLEX (RS422/485 Only)	Duplex Operation	HALF FULL	HALF
TX DELAY (RS422/485 Only)	Transmission Delay	1 to 500 milliseconds	1
LOOPBACK	Local Loop Back	DISABL ENABLE	DISABL
SHEDMODE (DMCS Only)	Shed Controller Mode and Output Level	LAST TO MAN FSAFE ToAUTO	LAST
SHED SP (DMCS Only)	Shed Setpoint Recall	TO LSP TO CSP	TO LSP
UNITS	Communication Units	PERCNT ENG	PERCNT

3.16 Alarms Set Up Group

Introduction

This data deals with the Alarms function that is available with your controller.

There are two alarms available. Each alarm has two setpoints.

You can configure each of these two setpoints to alarm on one of nine events and you can configure each setpoint to alarm High or Low.

You can also configure the two setpoints to alarm on the same event and to alarm both high and low, if desired.

Function prompts

Table 3-13 lists all the function prompts in the "Alarms" Set Up group.

Table 3-13 Alarms Group Function Prompts

Function Prompt (Lower Display)	Function Name	Selections or Range of Setting (Upper Display)	Factory Setting
A1S1 VAL	Alarm 1, Setpoint 1 Value	Value in Engineering Units	90
A1S2 VAL	Alarm 1, Setpoint 2 Value	Value in Engineering Units	10
A2S1 VAL	Alarm 2, Setpoint 1 Value	Value in Engineering Units	95
A2S2 VAL	Alarm 2, Setpoint 2 Value	Value in Engineering Units	5
A1S1TYPE	Alarm 1, Setpoint 1 Type	NONE IN 1 (Input 1) IN 2 (Input 2) PV (Process Variable) DEV (Deviation) OUTPUT SHED (Communications) EVON (SP Programming) EVOFF (SP Programming) MANUAL (Manual Mode)	NONE
A1S2TYPE	Alarm 1, Setpoint 2 Type	Same as A1S1TYPE	NONE
A2S1TYPE	Alarm 2, Setpoint 1 Type	Same as A1S1TYPE	NONE
A2S2TYPE	Alarm 2, Setpoint 2 Type	Same as A1S1TYPE	NONE
A1S1 H L	Alarm 1, Setpoint 1 State	LO Hi	HI
A1S1 EV	SP Programming Event Alarm State for Alarm 1, Setpoint 1	BEGIN END	

Table continued on next page

Function prompts, continued

Table 3-13 lists all the function prompts in the "Alarms" Set Up group.

Table 3-13 Alarms Group Function Prompts, continued

Function Prompt Lower Display	Function Name	Selections or Range of Setting Upper Display	Factory Setting
A1S2 H L	Alarm 1, Setpoint 2 State	LO HI	LO
A1S2 EV	SP Programming Event Alarm State for Alarm 1, Setpoint 2	BEGIN END	
A2S1 H L	Alarm 2, Setpoint 1 State	LO HI	HI
A2S1 EV	SP Programming Event Alarm State for Alarm 2, Setpoint 1	BEGIN END	
A2S2 H L	Alarm 2, Setpoint 2 State	LO HI	LO
A2S2 EV	SP Programming Event Alarm State for Alarm 2, Setpoint 2	BEGIN END	
AL HYST	Alarm Hysteresis	0.0 to 100 % of Output or Span as appropriate	0.1

3.17 Calib Group

Calibration data

The prompts used here are for field calibration purposes.
Refer to *Section 7 – Calibration* in this manual for complete information and instructions.

3.18 Status Group

Status Test Data

The prompts used here are read only.
They are used to determine the reason for a controller failure.
Refer to *Section 9 – Troubleshooting* in this manual for complete information.

3.19 Configuration Record Sheet

Keep a record

Enter the value or selection for each prompt on this sheet so you will have a record of how your controller was configured.

Group Prompt	Function Prompt	Value or Selection	Factory Setting
TIMER	TIMER	_____	DISABL
	PERIOD	_____	0.01
	START	_____	KEY
	L DISP	_____	TI REM
TUNING	PROP BD	_____	1.0
	or		
	GAIN	_____	1.0
	RATE MIN	_____	0.00
	RSET MIN	_____	1.0
	or		
	RSET RPM	_____	1.0
	or		
	MAN RSET	_____	0.0
	PROP BD2	_____	1.0
	or		
	GAIN 2	_____	1.0
	RATE2MIN	_____	0.00
	RSET2MIN	_____	1.0
	or		
	RSET2RPM	_____	1.0
	CYCSEC	_____	20.0
	CYC2SEC	_____	20.0
	SECURITY	_____	0
	LOCKOUT	_____	CALIB
	AUTO MAN	_____	ENABLE
	SP SEL	_____	ENABLE
	RUN HOLD	_____	ENABLE
SP RAMP	SP RAMP	_____	DISABL
	TIME MIN	_____	3
	FINAL SP	_____	—
	SP RATE	_____	DISABL
	EU/HR UP	_____	—
	EU/HR DN	_____	—
	SP PROG	_____	DISABL
ADAPTIVE	ADAPTIVE	_____	DISABL
	SP CHANG	_____	10
	KPG	_____	1.0
	CRITERIA	_____	NORMAL
ALGORITHM	CONT ALG	_____	PID A
	INPUT 2	_____	DISABL
	OUT ALG	_____	—
	4–20RNG	_____	50PCT
	RLY TYPE	_____	MECHAN
	TIMER	_____	DISABL
INPUT 1	DECIMAL	_____	XXXX
	UNITS	_____	NONE
	IN1 TYPE	_____	0—10mV
	XMITTER	_____	LINEAR
	IN1 HI	_____	1000
	IN1 LO	_____	0
	BIAS IN1	_____	0
	FILTER 1	_____	1
	BURNOUT	_____	NONE
	EMISSIV	_____	0
	PWR FREQ	_____	60HZ
	LANGUAGE	_____	ENGLIS
INPUT 2	XMITTER 2	_____	LINEAR
	IN2 HI	_____	1000
	IN2 LO	_____	0
	FILTER 2	_____	1

Group Prompt	Function Prompt	Value or Selection	Factory Setting
CONTROL	PID SETS	_____	1 ONLY
	SW VALUE	_____	0.00
	SP SOURC	_____	1 LOCAL
	RSP SRC	_____	NONE
	RATIO	_____	1.0
	BIAS	_____	0
	SP TRACK	_____	NONE
	POWER UP	_____	MANUAL
	PWR OUT	_____	LAST
	SP HILIM	_____	1000
	SP LOLIM	_____	0
	ACTION	_____	REVERSE
	OUT RATE	_____	DISABL
	PCT/M UP	_____	0
	PCT/M DN	_____	0
	OUT HLIM	_____	100.0
	OUT LOLIM	_____	0
	DROPOFF	_____	0.0
	DEADBAND	_____	2.0
	OUT HYST	_____	0.5
	FAILSAFE	_____	0.0
	MAN OUT	_____	0.0
	AUTO OUT	_____	0.0
	PBorGAIN	_____	GAIN
	MINorRPM	_____	MIN
OPTIONS	AUX OUT	_____	DISABL
	4mA VAL	_____	0
	20mA VAL	_____	0
	DIG IN 1	_____	NONE
	DIG1 COM	_____	DISABL
	DIG IN 2	_____	NONE
	DIG2 COM	_____	DISABL
Com	ComSTATE	_____	DISABL
	Com ADDR	_____	0
	SHEDTIME	_____	0
	PARITY	_____	ODD
	BAUD	_____	300
	DUPLEX	_____	—
	TX DELAY	_____	1
	LOOPBACK	_____	DISABL
	SHEDMODE	_____	LAST
	SHED SP	_____	TO LSP
	UNITS	_____	PERCNT
ALARMS	A1S1 VAL	_____	80
	A1S2 VAL	_____	10
	A2S1 VAL	_____	95
	A2S2 VAL	_____	5
	A1S1TYPE	_____	NONE
	A1S2TYPE	_____	NONE
	A2S1TYPE	_____	NONE
	A2S2TYPE	_____	NONE
	A1S1 H L	_____	HI
	A1S1 EV	_____	—
	A1S2 H L	_____	LO
	A1S2 EV	_____	—
	A2S1 H L	_____	HI
	A2S1 EV	_____	—
	A2S2 H L	_____	LO
	A2S2 EV	_____	—
	AL HYST	_____	0.1

Section 4 – Configuration Prompt Definitions

4.1 Overview

Introduction

This section provides information for all the user configurable parameters listed in the configuration section. If you aren't familiar with these parameters, this section gives you the parameter prompt, the selection or range of setting that you can make, and a definition of how each parameter setting affects controller performance. It will also refer you to any other prompts that might be affected by your selection.

What's in this section?

The table below lists the topics that are covered in this section. They are listed in the order of their appearance in the controller.

Topic		See Page
4.1	Overview	53
4.2	Timer Parameters Set Up Group	54
4.3	Tuning Parameters Set Up Group	55
4.4	Setpoint Ramp/Rate/Program Set Up Group	58
4.5	Adaptive Tune Set Up Group	59
4.6	Algorithm Data Set Up Group	61
4.7	Input 1 Set Up Group	65
4.8	Input 2 Set Up Group	69
4.9	Control Set Up Group	71
4.10	Options Set Up Group	76
4.11	Communications Set Up Group	79
4.12	Alarms Set Up Group	81
4.13	Calibration Data	84
4.14	Status Test Data	84

4.2 Timer Parameters Set Up Group

Introduction

The Timer option allows you to configure a timeout period and to select the timer start by either the keyboard (Run/Hold key) or Alarm 2. The optional digital input can also be configured to start the timer. The timer display is selectable as either "time remaining" or "elapsed time".

Alarm 1 is activated at the end of the timeout period. When the timer is enabled, it has exclusive control of the alarm 1 relay—any previous alarm 1 configuration is ignored. At timeout, the timer is ready to be activated again by whatever action has been configured.

Timer group prompts

Table 4-1 lists all the function prompts in the Timer setup group and their definitions.

Table 4-1 Timer Group Prompt Definitions

Lower Display Prompt	Upper Display Range of Setting or Selection	Parameter Definition
TIMER	ENABLE DISABL	TIMER allows you to enable or disable the timer option.
PERIOD	0:00 to 99:59	PERIOD allows you to configure the length of timeout period (from 0 to 99 hours:59 minutes).
START	KEY ALARM2	START allows you to select whether the timer starts with the keyboard (Run/Hold key) or Alarm 2.
L DISP	TI REM E TIME	L DISP allows you to select whether time remaining (TI REM) or elapsed time (E TIME) is displayed for the timer option. The time is shown on the lower display in HH:MM format along with a rotating "clock" character. If the "clock" rotation is *clockwise*, elapsed time is indicated. If the "clock" rotation is *counterclockwise*, time left is indicated.

4.3 Tuning Parameters Set Up Group

Introduction

Tuning consists of establishing the appropriate values for the tuning constants you are using so that your controller responds correctly to changes in process variable and setpoint. You can start with pre-determined values but you will have to watch the system to see how to modify them. Adaptive Tune feature automatically selects Gain, Rate, and Reset.

Set this group last

Because this group contains functions that have to do with security and lockout, we recommend that you configure this group last, after all the other configuration data has been loaded.

Tuning group prompts

Table 4-2 lists all the function prompts in the Tuning setup group and their definitions.

Table 4-2 Tuning Group Prompt Definitions

Lower Display Prompt	Upper Display Range of Setting or Selection	Parameter Definition
PROP BD or GAIN	0.1 to 999.9% or 0.1 to 999.9	**PROPORTIONAL BAND** is the percent of the range of the measured variable for which a proportional controller will produce a 100% change in its output. **GAIN** is the ratio of output change (%) over the measured variable change (%) that caused it. $G = \frac{100\%}{PB\%}$ where PB is the proportional band (in %) If the PB is 20%, then the Gain is 5. Likewise, a 3% change in the error signal (SP-PV) will result in a 15% change in the controller's output due to proportional action. If the Gain is 2, then the PB is 50%. Defined as "HEAT" Gain on Duplex models for variations of Heat/Cool applications. The selection of Prop. Band or Gain is made in the control parameter group under prompt "PBorGAIN."
RATE MIN	0.08 to 10.00 minutes 0.08 or less = OFF	**RATE** action affects the controller's output whenever the deviation is changing; and affects it more when the deviation is changing faster. Defined as "HEAT" Rate on Duplex models for variations of Heat/Cool applications.

Continued on next page

Table 4-2 Tuning Group Prompt Definitions, continued

Lower Display Prompt	Upper Display Range of Setting or Selection	Parameter Definition
RSET MIN or RSET RPM	0.02 to 50.00	RSET MIN = RESET IN MINUTES / REPEAT RSET RPM = RESET IN REPEATS PER MINUTE RESET adjusts the controller's output in accordance with both the size of the deviation (SP-PV) and the time it lasts. The amount of the corrective action depends on the value of Gain. The Reset adjustment is measured as how many times proportional action is repeated/minute. Used with control algorithm PID-A or PID-B. Defined as "HEAT" Reset on Duplex models for variations of Heat/Cool applications. The selection of minutes per repeat or repeats per minute is made in the control parameters group under prompt "MINorRPM."
MAN RSET	–100 to +100 (in % output)	MANUAL RESET is only applicable if you have control algorithm PD WITH MANUAL RESET. Because a proportional controller will not necessarily line out at setpoint, there will be a deviation (offset) from setpoint. This eliminates the offset and lets the PV line out at setpoint.
PROP BD2 or GAIN 2	0.1 to 999.9% or 0.1 to 999.9	PROPORTIONAL BAND 2 or GAIN 2, RATE 2, and RESET 2 parameters are the same as previously described for "Heat" except that they refer to the cool zone tuning constants on duplex models or the second set of PID constants, whichever is pertinent.
RATE2MIN	0.08 to 10.00 minutes 0.08 or less = OFF	
RSET2MIN RSET2RPM	0.02 to 50.00	
CYC SEC	1 to 120 seconds	CYCLE TIME (HEAT) determines the length of one time proportional output relay cycle. Defined as "HEAT" cycle time for Heat/Cool applications. Electromechanical relays
CYC2 SEC	1 to 120 seconds	CYCLE TIME 2 (COOL) is the same as above except it applies to Duplex models as the cycle time in the "COOL" zone of Heat/Cool applications or for 2nd set of PID constants. Electromechanical relays
CYC SX3	1 to 120 (1/3 second increments) 1 = .33 sec./120 = 40 sec.	CYCLE TIME (HEAT) - same as above except for solid state relays. Algorithm prompt "RLY TYPE", selection "SOL ST"
CYC2 SX3	1 to 120 (1/3 second increments) 1 = .33 sec./120 = 40 sec	CYCLE TIME 2 (COOL) same as above except for solid state relays. Algorithm prompt "RLY TYPE", selection "SOL ST"

Continued on next page

Table 4-2 Tuning Group Prompt Definitions, continued

Lower Display Prompt	Upper Display Range of Setting or Selection	Parameter Definition
SECURITY	0000-4095	**SECURITY CODE** – The level of keyboard lockout may be changed in the set up mode. Knowledge of a security code may be required to change from one level to another. Select this number here, copy it, and keep it in a secure location. Entering "0" disables the security code feature. NOTE: The Security Code is for keyboard entry only and is not available via communications. Can only be changed if "LOCKOUT" selection is "NONE".
LOCKOUT		**LOCKOUT** applies to one of the functional groups: Configuration, Calibration, Tuning, Adaptive Tune. **DO NOT CONFIGURE UNTIL ALL CONFIGURATION IS COMPLETE.**
	NONE	No Lockout – all groups read/write. Allows individual key lockout.
	CALIB	**CALIB** – All are available for read/write except for the Calibration and Keyboard Lockout groups.
	+CONF	**+CONF** – Tuning, SP Ramp, and Adaptive Tune groups are read/write. All other groups are read only. Keyboard Lockout and Calibration groups are not available.
	+VIEW	**+VIEW** – Tuning and Setpoint Ramp parameters are read/write. No other parameters are viewable.
	MAX	**MAX** – Tuning and Setpoint Ramp parameters are available for read only. No other parameters are viewable
AUTO MAN		**MANUAL/AUTO KEY LOCKOUT** – Allows you to disable the Manual/Auto key.
	DISABL ENABLE	Disable Enable
		Can only be viewed if "LOCKOUT" is configured for "NONE".
SP SEL		**SETPOINT SELECT KEY LOCKOUT** – Allows you to disable the Setpoint Select key.
	DISABL ENABLE	Disable Enable
		Can only be viewed if "LOCKOUT" is configured for "NONE".
RUN HOLD		**RUN/HOLD KEY LOCKOUT** – Allows you to disable the Run/Hold key.
	DISABL ENABLE	Disable Enable
		Can only be viewed if "LOCKOUT" is configured for "NONE".

4.4 Setpoint Ramp/Program Set Up Group

Introduction

A single setpoint ramp can be configured to occur between the current local setpoint and a final local setpoint over a time interval of from 1 to 255 minutes.
There is also a configurable rate of change for any local setpoint change.
You can also configure a 12 segment program from a Ramp/Soak profile.
You can start and stop the ramp/program using the RUN/HOLD key.

Setpoint Ramp/ Rate/Program group prompts

Table 4-3 lists all the function prompts in the Setpoint Ramp/Rate/Program setup group and their definitions.

Table 4-3 Setpoint Ramp/Rate/Program Group Definitions

Lower Display Prompt	Upper Display Range of Setting or Selection	Parameter Definition
SP RAMP	ENABLE DISABL	**SINGLE SETPOINT RAMP** — Make selection to enable or disable the setpoint ramp function. Make sure you configure a ramp time and a final setpoint value. "SP RATE" and "SP PROG" must be disabled. **ENABLE SETPOINT RAMP** — Allows you to start the setpoint ramp (in automatic mode). **DISABLE SETPOINT RAMP** — Disables the setpoint ramp.
TIME MIN	0 to 255 minutes	**SETPOINT RAMP TIME** — Enter the number of minutes desired to reach the final setpoint. A ramp time of "0" implies and immediate change of setpoint.
FINAL SP	Within SP limits	**SETPOINT RAMP FINAL SETPOINT** — Enter the value desired for the final setpoint. The controller will operate at the setpoint set here when ramp is ended.
SP RATE	ENABLE DISABL	**SETPOINT RATE** — Lets you configure a specific rate of change for any local setpoint change. "SP RAMP" and "SP PROG" must be disabled. **ENABLE SETPOINT RATE** — allows the SP rate feature **DISABLE SETPOINT RATE** — disables the setpoint rate feature.
EU/HR UP	0 to 9999 in Engineering Units per hour	**RATE UP** — Value for SP Rate selection
EU/HR DN	0 to 9999 in Engineering Units per hour	**RATE DOWN** — Value for SP Rate selection
SP PROG (option)	ENABLE DISABL	**SETPOINT RAMP/SOAK PROGRAM** Available only with controllers that contain this option. For reasons of convenience, the information for the prompts when SP PROG is enabled are included in *Section 6 — Setpoint Programming Option.* "SP RAMP" and "SP RATE" must be disabled.

4.5 Adaptive Tune Set Up Group

Introduction

Adaptive Tune continuously adjusts the PID parameters in response to setpoint changes. Also, it can be used during start-up without prior initialization or process knowledge.

Adaptive Tune group prompts

Table 4-4 lists all the function prompts in the Adaptive Tune setup group and their definitions.

Table 4-4 Adaptive Tune Group Definitions

Lower Display Prompt	Upper Display Range of Setting or Selection	Parameter Definition
ADAPTIVE		ADAPTIVE TUNE
	DISABL	DISABLE ADAPTIVE TUNE – Disables the Adaptive Tune function.
	SP	SETPOINT ONLY – This selection tunes on setpoint changes only. It employs time domain analysis to accelerate line out at any desired setpoint without prior initialization or process knowledge. SP Only is the recommended start-up mode - to be used when no knowledge of the process tuning values is available. In the Start-up mode, and after enabling ADAPTIVE, the operator simply lines out the process variable in manual mode, selects the desired SP value and switches to automatic mode.
SP CHANG	5 to 15%	SETPOINT CHANGE – The minimum setpoint change that will result in re-tuning must be configured between 5% and 15%: i.e. if the range is 0 to 2400 and 5% is configured, re-tuning will occur if the setpoint change is 120 or larger.
KPG	0.10 to 10.00	PROCESS GAIN – This is the Gain of the process being tuned. It is automatically calculated during tuning process. This is normally a READ only value. It should only need to be changed if the controller fails to identify the process. In this case, set the value to algebraic value of PV in percent, divided by output in percent while in the manual mode. ATTENTION Note you must disable Adaptive tune to change tuning constant values from the keyboard.
CRITERIA		TUNING CRITERIA – Lets you select a criterion best suited to your process.
	NORMAL	NORMAL – Original critical damping (no overshoot) criterion.
	FAST	FAST – Is a more aggressive tuning with a minimal possible overshoot of less than 0.5%. For example: slightly underdamped.

Continued on next page

Table 4-4 Adaptive Tune Group Definitions, continued

Lower Display Prompt	Upper Display Range of Setting or Selection	Parameter Definition
AT ERROR		**ADAPTIVE TUNE ERROR STATUS** – When an error is detected in the Adaptive Tune process, an error prompt will appear.
	NONE	**NO ERRORS**
	OUTLIM	**OUTPUT GREATER OR LESS THAN OUTPUT LIMITS** – Output set insufficiently to get Setpoint value.
	IDFAIL	**IDENTIFICATION PROCESS FAILED** – An illegal value for Gain, Rate, or Reset was calculated.
	ABORT	**CURRENT ADAPTIVE TUNE PROCESS ABORTED** – caused by one of the following conditions: • changing to manual mode • digital input detected • in heat region of output and a cool output calculated or vice versa.
	RUNNING	**RUNNING** – Informational prompt indicating that "SP Adapt" is still active checking process gain, even through "T" is not lit. It does not affect keyboard operation.

4.6 Algorithm Data Set Up Group

Introduction

This data deals with various algorithms in the controller: Control algorithm, Output algorithm, Enabling the second input, or the Current Duplex range.

Algorithm group prompts

Table 4-5 lists all the function prompts in the Algorithm setup group and their definitions.

Table 4-5 Algorithm Group Definitions

Lower Display Prompt	Upper Display Range of Setting or Selection	Parameter Definition
CONT ALG		The **CONTROL ALGORITHM** lets you select the type of control that is best for your process.
	ON-OFF	**ON/OFF** is the simplest control type. The output can be either ON (100%) or OFF (0%). The Process Variable (PV) is compared with the setpoint (SP) to determine the sign of the error (ERROR = PV-SP). The ON/OFF algorithm operates on the sign of the error signal. In Direct Acting Control, when the error signal is positive, the output is 100%; and when the error signal is negative, the output is 0%. If the control action is reverse, the opposite is true. An adjustable overlap (Hysteresis Band) is provided between the on and off states. Other prompts affected: "OUT HYST" **DUPLEX ON/OFF** is an extension of this algorithm when the output is configured for Duplex. It allows the operation of a second ON/OFF output. There is a deadband between the operating ranges of the two inputs and an adjustable overlap (hysteresis) of the on and off states of each output. Both Deadband and Hysteresis are separately adjustable. With no relay action the controller will read 50%. Other prompts affected: "OUT HYST" and "DEADBAND"
	PID A NOTE: PID A should not be used for Proportional only action, i.e. no Integral (reset) action. Instead, use PD+MR with rate set to 0.	**PID A** is normally used for three-mode control. This means that the output can be adjusted somewhere between 100% and 0%. It applies all three control actions — Proportional (P), Integral (I), and Derivative (D) — to the error signal. Proportional (Gain) — regulates the controller's output in proportion to the error signal (the difference between Process Variable and Setpoint). Integral (Reset) -- regulates the controller's output to the size of the error and the time the error has existed. (The amount of corrective action depends on the value of proportional Gain.) Derivative (Rate) – regulates the controller's output in proportion to the rate of change of the error. (The amount of corrective action depends on the value of proportional Gain.)

Continued on next page

Table 4-5 Algorithm Group Definitions, continued

Lower Display Prompt	Upper Display Range of Setting or Selection	Parameter Definition
CONT ALG continued	PID B	**PID B** Unlike the PID-A equation, the controller gives only an integral response to a setpoint change, with no effect on the output due to the gain or rate action, and it gives full response to PV changes. Otherwise controller action is as described for the PID-A equation. See note on PID-A.
	PD+MR	**PD WITH MANUAL RESET** is used whenever integral action is not wanted for automatic control. The equation is computed with no integral contribution. The MANUAL RESET, which is operator adjustable, is then added to the present output to form the controller output. Switching between manual and automatic mode will not be bumpless. If you select PD with Manual Reset you can also configure the following variations • PD (Two Mode) control, • P (Single Mode) control. Set Rate(D) and/or Reset Time(I) to 0. Other prompts affected: "MAN RSET" This selection automatically allows MAN RSET (output bias) value to be displayed on the lower display as "BIA". The value can be changed using the ▲ or ▼ keys.
	3PSTEP	The **THREE POSITION STEP** algorithm allows the control of a valve (or other actuator), with an electric motor driven by two controller relay outputs; one to move the motor upscale, the other downscale without a feedback slidewire linked to the motor shaft. The deadband and hysteresis are adjustable in the same manner as the duplex output algorithm. The Three Position Step Control algorithm provides an output display (OUT) which is an estimated motor position since the motor is not using any feedback. Although this output indication is only an approximation, it is "corrected " each time the controller drives the motor to one of its stops (0% or 100%). It avoids all the control problems associated with the feedback slidewire (wear, dirt, noise). When operating in this algorithm, the estimated "OUT" display is shown to the nearest percent (i.e. no decimal). Refer to the Operation section for motor position displays. As a customer configurable option, when a second input board is installed, the motor slidewire can be connected to the controller. The actual slidewire position is then shown on the lower display as "POS". **This value is used for display only, it is not used in the 3 Position Step algorithm.** To configure this option, set the input 2 Enable/Disable prompt shown next to "DISABLE". Calibrate the slidewire. Other prompts affected: "DEADBAND"

Continued on next page

Table 4-5 Algorithm Group Definitions, continued

Lower Display Prompt	Upper Display Range of Setting or Selection	Parameter Definition
INPUT 2	ENABLE DISABL	**INPUT 2** algorithm allows you to enable or disable the second input. Appears only when input 2 is ordered.
OUT ALG		The **OUTPUT ALGORITHM** lets you select the type of output you want. Not applicable with Control Algorithm prompt "3PSTEP." *Selections are model dependent. For example, current output models cannot be configured for Time Proportioning Simplex Output.*
	TIME	**RELAY SIMPLEX** — Type of output using one SPDT relay. Its normally open (NO) or normally closed (NC) contacts are selected when wiring the rear terminals. Other prompts affected: "OUT HYST"
	CURRNT	**CURRENT SIMPLEX** — Type of output using one 2 to 20 mA signal that can be fed into a positive or negative grounded load of 0 to 1000 ohms. The signal can be recalibrated for any desired range from 2 to 20 mA for 0 to 100% output.
	POSITN	**POSITION PROPORTIONAL SIMPLEX** — Type of output using two SPDT relays and a motor which has a 100 to 1000 ohms feedback slidewire. Other prompt affected: "DEADBAND"
	TIME D	**RELAY DUPLEX** — Type of output using two SPDT relays. Its normally open (NO) or normally closed (NC) contacts are selected when wiring the rear terminals (see Installation section). Other prompts affected: "DEADBAND"
	CUR D	**CURRENT DUPLEX** is similar to current simplex but provides a second current output if Auxiliary output is used. The second output is usually scaled so that zero and span correspond with 0% and 50% output (cool zone). When the output is 0 to 50%, the controller uses tuning parameter set #2, when the output is 50 to 100% it uses set #1. NOTE: Auxiliary Output must be configured for "OUTPUT." Other prompts affected: "DEADBAND", "4-20RNG".
	CUR TI	**CURRENT/RELAY DUPLEX (RELAY = HEAT)** is a variation of duplex with current active for 0 to 50% output (tuning set 2) and relay#2 is active 50 to 100% output (tuning set 1). Other prompts affected: "4-20 RNG," "DEADBAND"
	TI CUR	**RELAY CURRENT DUPLEX (RELAY = COOL)** is similar to "CUR-TI" except that current is active for 50 to 100% and relay #2 is active for 0 to 50%. Other prompts affected: "4-20 RNG," "DEADBAND"

Continued on next page

Table 4-5 Algorithm Group Definitions, continued

Lower Display Prompt	Upper Display Range of Setting or Selection	Parameter Definition
4-20 RNG		**CURRENT DUPLEX RANGE ALGORITHM** — Used with Output Algorithm selections "CUR-D," "CUR-TI", or "TI-CUR." For "CUR-TI" and "TI-CUR", this should be set to "50 PCT".
	50 PCT	**CURRENT DUPLEX RANGE (SPLIT)** For "CUR D" this enables the normal control current output to provide heat control and the Auxiliary output to provide cool control. To enable this, the auxiliary output must be: • Selected for Output • Auxiliary current output is scaled as desired for 0-50% controller output (4mA set to 50; 20mA set to 0). • Deadband for this configuration only applies to the current output. Auxiliary output must have Deadband scaled in. For example: If a 2% Deadband is desired, then enter a "2.0" for the "Deadband" selection in the Control Algorithm Group. This will apply Deadband to the Current Output. In the "Options" group, set the Auxiliary Output "4mA" selection to "49.0" and the "20mA" selection to 0.0. Other prompts affected: "AUX OUT"
	100PCT	**CURRENT DUPLEX RANGE (FULL)** enables the normal control current output to provide duplex heat and cool control over 0 - 100% of the controller output. The PID heat parameters apply when the controller output is greater than 50% and the PID cool parameters apply when the controller output is less than 50%.
RLY TYPE		**RELAY TYPE** – For Time Proportional only
	MECHAN	ELECTROMECHANICAL RELAY – This selection allows cycle times of from 1 to 120 seconds.
	SOL ST	SOLID STATE RELAY OR OPEN COLLECTOR OUTPUT – This selection allows cycle times of 0.333 seconds through 40.0 seconds in 0.333 second increments. **ATTENTION** Lockout must be set to "NONE" to view this prompt.
TIMER		**TIMER** – This selection allows the "TIMER" group to appear for configuration.
	ENABLE DISABL	**ENABLE** – Enables "Timer" group. **DISABLE** – Disables "Timer" group.

4.7 Input 1 Parameters Set Up Group

Introduction

These are the parameters required for input 1; temperature units, decimal location, actuation, transmitter characterization, high and low range values in engineering units, filter, burnout, emissivity, and power line frequency.

Input 1 group prompts

Table 4-6 lists all the function prompts in the Input 1 setup group and their definitions.

Table 4-6 Input 1 Group definitions

Lower Display Prompt	Upper Display Range of Setting or Selection	Parameter Definition
DECIMAL		DECIMAL POINT LOCATION -- This selection determines where the decimal point appears in the display.
	XXXX XXX.X XX.XX	None One Place Two Places
		NOTE: Auto-ranging will occur when one decimal position has been selected and the value increases above 999.9 but auto-ranging *will not* similarly occur when two decimal positions are selected.
UNITS		TEMPERATURE UNITS -- This selection will be indicated on the annunciator. What display of temperature do you want:
	DEG F DEG C NONE	Degrees Fahrenheit Degrees Celsius None

Continued on next page

Table 4-6 Input 1 Group definitions, continued

Lower Display Prompt	Upper Display Range of Setting or Selection	Parameter Definition		
IN1 TYPE		**INPUT 1 ACTUATION TYPE** – This selection determines what actuation you are going to use for input one.		
	B TC	B thermocouple	0 to 3300°F	-18 to 1815°C
	E TC H	E thermocouple high	-454 to 1832°F	-270 to 1000°C
	E TC L	E thermocouple low	-200 to 1100°F	-129 to 593°C
	J TC H	J thermocouple high	0 to 1600°F	-18 to 871°C
	J TC L	J thermocouple low	20 to 770°F	-7 to 410°C
	K TC H	K thermocouple high	0 to 2400°F	-18 to 1316°C
	K TC L	K thermocouple low	-20 to 1000°F	-29 to 538°C
	NNM H	NiNiMo thermocouple high	32 to 2500°F	0 to 1371°C
	NNM L	NiNiMo thermocouple low	32 to 1260°F	0 to 682°C
	NIC TC	Nicrosil-Nisil thermocouple	0 to 2372°,F	-17.8 to 1300°C
	R TC	R thermocouple	0 to 3100°F	-18 to 1704°C
	S TC	S thermocouple	0 to 3100°F	-18 to 1704°C
	T TC H	T thermocouple high	-300 to 700°F	-184 to 371°C
	T TC L	T thermocouple low	-200 to 500°F	-129 to 260°C
	W TC H	W5W26 thermocouple high	0 to 4200°F	-18 to 2316°C
	W TC L	W5W26 thermocouple low	0 to 2240°F	-18 to 1227°C
	100 PT	100 Ohm–RTD	-300 to 1200°F	-184 to 649°C
	500 PT	500 Ohm–RTD	-300 to 1200°F	-184 to 649°C
	100 LO	100 Ohm RTD low	0 to 300°F	-18 to 149°C
	RADIAM	Radiamatic (RH)	1400 to 3400°F	760 to 1871°C
	4-20mA	4 to 20 Milliamps		
	0-10mV	0 to 10 Millivolts		
	10-50m	10 to 50 Millivolts		
	1-5 V	1 to 5 Volts		
	0-10 V	0 to 10 Volts		

Continued on next page

Table 4-6 Input 1 Group definitions, continued

Lower Display Prompt	Upper Display Range of Setting or Selection	Parameter Definition
XMITTER	Select one from the columns below B TC E TC H E TC L J TC H J TC L K TC H K TC L NNM H NNM L NIC TC R TC S TC T TC H T TC L W TC H W TC L 100 PT 500 PT 100 LO RADIAM LINEAR SQROOT	**TRANSMITTER CHARACTERIZATION** — This selection lets you instruct the controller to characterize a linear input to represent a non-linear one. NOTE: Prompt only appears when a linear actuation is selected at prompt 'IN1 TYPE'. FOR EXAMPLE: If input 1 is a 4 to 20 mA signal, but the signal represents a type "K" thermocouple; select "K TC H" and the controller will characterize the 4 to 20 mA signal so that it is treated as a type "K" thermocouple input (high range). Parameter definitions are the same as shown in Lower Display Prompt "IN1 TYPE"
IN1 HI	-999.0 to 9999. in Engineering units	**INPUT 1 HIGH RANGE VALUE** in engineering units is displayed for all inputs but can only be configured for linear or square root transmitter characterization. Scale the #1 input signal to the display value you want for 100%. EXAMPLE: Actuation (Input) = 4 to 20 mA Process Variable = Flow Range of Flow = 0 to 250 Gal/Min High Range display value = 250 Then 20 mA = 250 Gal/Min The control setpoint will be limited by the range of units selected here.
IN1 LO	-999.0 to 9999. o in Engineering units	**INPUT 1 LOW RANGE VALUE** in engineering units is displayed for all inputs but can only be configured for linear or Square Root transmitter characterization. Scale the #1 input signal to the display value you want for 0%. See example on previous page. The control setpoint for input 1 will be limited by the range of units selected here.
BIAS IN1	-999.0 to 9999.	**BIAS ON INPUT 1** — Bias is used to compensate the input for drift of an input value due to deterioration of a sensor, or some other cause. Select the bias value you want on input one.

Continued on next page

Table 4-6 Input 1 Group definitions, continued

Lower Display Prompt	Upper Display Range of Setting or Selection	Parameter Definition
FILTER 1	0 to 120 seconds No filter = 0	FILTER FOR INPUT ONE — A software digital filter is provided for input 1 to smooth the input signal. You can configure the first order lag time constant from 1 to 120 seconds. If you do not want filtering, enter 0.
BURNOUT		BURNOUT PROTECTION (SENSOR BREAK) provides most input types with upscale or downscale protection if the input fails. 1-5V, 0-10V, or 4-20 mA inputs require no burnout or "NONE" selection.
	NONE	NO BURNOUT — Pre-configured Failsafe output applied if failed input is detected. Error message "INPUT1 FAIL" is flashed on the lower display intermittently every 10 seconds.
	UP	UPSCALE BURNOUT will make the PV signal increase to full scale when a sensor fails, and flash "INPUT1 FAIL" on the lower display intermittently every 10 seconds. The controller remains in Automatic control mode and adjusts the controller output signal in response to the full scale PV signal developed by the Burnout circuitry.
	DOWN	DOWNSCALE BURNOUT will make the PV signal decrease to the lower range value when a sensor fails, and flash "INPUT1 FAIL" on the lower display intermittently every 10 seconds. The controller remains in Automatic control mode and adjusts the controller output signal in response to the zero percent PV signal developed by the Burnout circuitry. NOTE: For no Burnout, i.e. "None," to function properly on a 4-20MA input, there must be a dropping resistor directly across the input terminals (i.e., not remote), then the unit can detect the "zero" voltage that occurs when the 4-20 mA line is opened.
EMISSIV	0.01 to 1.00	EMISSIVITY is a correction factor applied to the Radiamatic input signal that is the ratio of the actual energy emitted from the target to the energy which would be emitted if the target were a perfect radiator. Available only for "Radiamatic" inputs.
PWR FREQ	60 Hz 50 Hz	POWER LINE FREQUENCY — select whether your controller is operating at 60 Hz or 50 Hz. 60 HERTZ 50 HERTZ
LANGUAGE	ENGLIS FRENCH GERMAN SPANIS ITALAN	

4.8 Input 2 Parameters Set Up Group

Introduction

These are the parameters required for input 2; actuation, transmitter characterization, high and low range values in engineering units, filter, and burnout.

Input 2 group prompts

Table 4-7 lists all the function prompts in the Input 2 setup group and their definitions.

Table 4-7 Input 2 Group Definitions

Lower Display Prompt	Upper Display Range of Setting or Selection	Parameter Definition
XMTTER2		TRANSMITTER CHARACTERIZATION — This selection lets you instruct the controller to characterize a linear input to represent a non-linear one. FOR EXAMPLE: If Input 2 is a 4 to 20 mA signal, but you want the signal to represent a type "K" thermocouple; select " K TC H" and the controller will characterize the 4 to 20 mA signal so that it is treated as a type "K" thermocouple input.
	B TC	B Type Thermocouple
	E TC H	E Type Thermocouple High
	E TC L	E Type Thermocouple Low
	J TC H	J Type Thermocouple High
	J TC L	J Type Thermocouple Low
	K TC H	K Type Thermocouple High
	K TC L	K Type Thermocouple Low
	NNM H	NiNiMo Type Thermocouple High
	NNM L	NiNiMo Type Thermocouple Low
	NC TC	Nicrosil Nisil Thermocouple
	R TC	R Type Thermocouple
	S TC	S Type Thermocouple
	T TC H	T Type Thermocouple High
	T TC L	T Type Thermocouple Low
	W TC H	W5W26 Type Thermocouple High
	W TC L	W5W26 Type Thermocouple Low
	100 PT	100 Ohm–RTD
	500 PT	500 Ohm–RTD
	100 LO	100 Ohm RTD Low
	RADIAM	Radiamatic (RH)
	LINEAR	Linear Range
	SQROOT	Square Root

Continued on next page

Table 4-7 Input 2 Group Definitions, continued

Lower Display Prompt	Upper Display Range of Setting or Selection	Parameter Definition
IN2 HI	–999.0 to 9999. in Engineering units	**INPUT 2 HIGH RANGE VALUE** in engineering units is displayed for all inputs but can only be configured for linear or square root actuations only. Scale the #2 input signal to the display value you want for 100%. This is what you want 20mA or 5 volts to represent. EXAMPLE: Same as input one.
IN2 LO	–999.0 to 9999. in Engineering units	**INPUT 2 LOW RANGE VALUE** in engineering units, for linear or Square Root characterization only. Scale the #2 input signal to the display value you want for 0%. This is what you want 4mA or 1 volt to represent. EXAMPLE: Same as input one.
FILTER 2	0 to 120 seconds No filter = 0	**FILTER FOR INPUT TWO** — A software digital filter is provided for input 2 to smooth the input signal. You can configure the first order lag constant from 1 to 120 seconds. If you do not want filtering, enter 0.

4.9 Control Parameters Set Up Group

Introduction

The functions listed in this group deal with how the UDC 3000 will control the process including: Number of tuning parameter sets, Setpoint source, Ratio, Bias, Tracking, Power-up recall, Setpoint limits, Output direction and limits, Deadband and Hysteresis.

Control group prompts

Table 4-8 lists all the function prompts in the Control setup group and their definitions.

Table 4-8 Control Group Definitions

Lower Display Prompt	Upper Display Range of Setting or Selection	Parameter Definition
PID SETS		NUMBER OF TUNING PARAMETER SETS — This selection lets you choose one or two sets of tuning constants (gain, rate, and reset).
	1 ONLY	ONE SET ONLY — Only one set of tuning parameters is available. Configure the values for: Gain (proportional band) Rate Reset Time Cycle Time (if time proportional is used)
	2KEYBD	TWO SETS KEYBOARD SELECTABLE — Two sets of tuning parameters can be configured and can be selected at the operator interface or by using the Digital Inputs. Press LOWR DISP key until you see "PID SET1" or "PID SET2" to switch between sets. Configure the values for: Gain, Rate , Reset, Cycle Time Gain #2, Rate #2, Reset#2, Cycle#2 Time
	2PV SW	TWO SETS PV AUTOMATIC SWITCHOVER — When the process variable is *GREATER* than the value set at prompt "SW VALUE" (Switchover Value), the controller will use Gain, Rate, Reset, and Cycle Time. The active PID SET can be read in the lower display. When the process variable is *LESS* than the value set at prompt "SW VALUE," the controller will use Gain #2, Rate #2, Reset #2, and Cycle #2 Time. The active PID SET can be read in the lower display. Other prompts affected: SW VALUE
	2SP SW	TWO SETS SP AUTOMATIC SWITCHOVER — When the setpoint is *GREATER* than the value set at prompt "SW VALUE" (Switchover Value), the controller will use Gain, Rate, Reset, and Cycle. When the setpoint is *LESS* than the value set at prompt "SW VALUE," the controller will use Gain #2, Rate #2, Reset #2, and Cycle #2. Other prompts affected: SW VALUE

Continued on next page

Table 4-8 Control Group Definitions, continued

Lower Display Prompt	Upper Display Range of Setting or Selection	Parameter Definition
SW VALUE	Value in engineering units	AUTOMATIC SWITCHOVER VALUE —This is the value of Process Variable or Setpoint at which the controller will switch from Tuning Constant Set #2 to Set #1. Only appears when PID SETS selections "2PV SW" or "2SP SW" are selected.
SP SOURC		SETPOINT SOURCE — This selection determines what your setpoint source will be; One local or Two local. Toggled by the "SETPOINT SELECT" key.
	1LOCAL	LOCAL SETPOINT — The setpoint entered from the keyboard.
	2LOCAL	TWO LOCAL SETPOINTS — This selection lets you switch between two local setpoints. Mutually exclusive with Remote setpoint.
RSP SRC		REMOTE SETPOINT — A signal is brought in through the input 2 terminals and used as the control setpoint. Ratio and Bias can be applied to the remote setpoint. Mutually exclusive with 2 Local setpoints Other prompts affected: RATIO, BIAS
	NONE IN 2	NONE - No remote setpoint IN 2 - RSP using second input (Input 2 must be enabled)
RATIO	–20.00 to 20.00	RATIO — Used when Input 2 operates as a remote setpoint, prompt "REMOTE." This ratio value can be applied to the remote setpoint. It establishes the correct relationship between the remote setpoint and the input 2 signal applied according to the formula below...(under Bias). Input 2 must be enabled, or DMCS/RS422 Comm enabled.
BIAS	–999.0 to 9999 (Engineering Units)	BIAS — Used when Input 2 operates as a remote setpoint (prompt "REMOTE"). Bias, together with ratio, establishes the correct relationship between the remote setpoint and the input 2 signal applied according to the formula: REMOTE SETPOINT = IN2 VALUE (RATIO) + BIAS NOTE: IN2 VALUE = Actual (engineering units) All values must be within configured setpoint high and low limits. Input 2 must be enabled, or DMCS/RS422 Comm enabled.

Continued on next page

Table 4-8 Control Group Definitions, continued

Lower Display Prompt	Upper Display Range of Setting or Selection	Parameter Definition
SP TRACK		SETPOINT TRACKING — The local setpoint can be configured to track either PV or RSP as listed below:
	NONE	NO TRACKING — If local setpoint tracking is not configured, the LSP will not be altered when transfer from RSP to LSP is made.
	PV	LSP (LOCAL SETPOINT) TRACKS PV IN MANUAL
	RSP	LSP (LOCAL SETPOINT) TRACKS RSP (REMOTE SETPOINT) IN AUTO — If configured, when the controller transfers out of remote setpoint, the last value of the remote setpoint (RSP) is inserted into the local setpoint.
POWER UP		POWER UP CONTROLLER MODE RECALL — This selection determines which mode and setpoint the controller will use when the controller restarts after a power loss. Select one from below:
	MANUAL	MANUAL, LSP — At power-up, the controller will use *manual* mode with the local setpoint displayed.
	A LSP	AUTOMATIC, LOCAL SETPOINT — At power-up, the controller will return to the *automatic* mode and will use the local setpoint for control.
	A RSP	AUTOMATIC, REMOTE SETPOINT — At power-up, the controller will return to the *automatic* mode and will use the remote setpoint for control.
	AM SP	LAST MODE/LAST SETPOINT
	AM LSP	LAST MODE/LAST LOCAL SETPOINT
PWR OUT		POWER UP OUTPUT SELECTION (for 3P Step control only)—This selection determines what position the motor will be in when powered up.
	LAST	LAST—At power up in automatic mode, the motor position will be the last one prior to power down. When the unit goes into FAILSAFE, it will stay in automatic mode; motor will not be driven to the configured Failsafe position.
	F'SAFE	F'SAFE—At power up in manual mode, the motor will be driven to either the 0% or 100% output position; whichever is selected at prompt "FAILSAFE". When the unit goes into FAILSAFE, it will go to manual mode; motor will be driven to the configured Failsafe position.
SP HILIM	0 to 100% of span input in engineering units with decimal place	SETPOINT HIGH LIMIT* — This selection prevents the local and remote setpoints from going above the value selected here. The setting must be equal or less than the upper range of input 1. Input 2, when configured for remote setpoint, will be restricted to this upper limit.

*The Local Setpoint will automatically adjust itself to be within the setpoint limit range. For example, if SP = 1500 and the SP HILIM is changed to 1200, the new Local Setpoint will be 1200.

Continued on next page

Table 4-8 Control Group Definitions, continued

Lower Display Prompt	Upper Display Range of Setting or Selection	Parameter Definition
SP LOLIM	0 to 100% of span input in engineering units with decimal place	SETPOINT LOW LIMIT* — This selection prevents the local and remote setpoints from going below the value selected here. The setting must be equal or greater than the lower range of input 1. Input 2, when configured for remote setpoint, will be restricted to this lower limit.
ACTION		CONTROL OUTPUT DIRECTION — In what direction do you want the controller output to go when the process variable increases.
	DIRECT	DIRECT ACTING CONTROL — The controller's output increases as the process variable increases.
	REVRSE	REVERSE ACTING CONTROL — The controller's output decreases as the process variable increases.
OUT RATE		OUTPUT CHANGE RATE - Enables or Disables the Output Change Rate. The maximum rate is set at Prompt "PCT/M UP" or "PCT/M DN" shown below. ATTENTION Does not apply to 3 Position Step Control.
	DISABL	Disable
	ENABLE	Enable
PCT/M UP	0 to 9999%/minute	OUTPUT RATE UP VALUE - This selection limits the rate at which the output can change upward. Enter a value in percent/minute. Appears only if "OUT RATE" is enabled. "0" means no output rate applied.
PCT/M DN	0 to 9999%/minute	OUTPUT RATE DOWN VALUE - This selection limits the rate at which the output can change downward. Enter a value in percent/minute. Appears only if "OUT RATE" is enabled. "0" means no output rate.
OUTHILIM	–5.0 to 105.0% of output	HIGH OUTPUT LIMIT — This is the highest value of output beyond which you do not want the controller automatic output to exceed. Use 0 to 100% for time proportional output type.
OUTLOLIM	–5.0 to 105.0% of output	LOW OUTPUT LIMIT — This is the lowest value of output below which you do not want the controller automatic output to exceed. Use 0 to 100% for time proportional output type.
DROPOFF	–5 to 105.0% of output	CONTROLLER DROPOFF VALUE — Select an output value that below which the controller output will dropoff to the low output limit value set in prompt "OUT LOLIM." DROPOFF is not displayed if On-Off or 3 Position Step is configured.

*The Local Setpoint will automatically adjust itself to be within the setpoint limit range. For example, if SP = 1500 and the SP HILIM is changed to 1200, the new Local Setpoint will be 1200.

Continued on next page

Table 4-8 Control Group Definitions, continued

Lower Display Prompt	Upper Display Range of Setting or Selection	Parameter Definition
DEADBAND	–5.0 to 25.0% 0.5 to 5.0%	DEADBAND is an adjustable gap between the operating ranges of output 1 and output 2 in which neither output operates (positive value) or both outputs operate (negative value). It is the difference between the nominal trip points of relay 1 and 2. Time Duplex or Current Duplex Position Proportional and Three Position Step
OUT HYST	0.0 to 5.0% of PV span	HYSTERESIS (OUTPUT RELAY ONLY) is an adjustable overlap of the ON/OFF states of each control output. This is the difference between the value of the process variable at which the control outputs energize and the value at which they de-energize. Only applicable for ON-OFF control.
FAILSAFE	0 to 100% 100PCT 0 PCT	FAILSAFE OUTPUT VALUE — The output level used when you have Communications SHED or when NO BURNOUT is configured and input 1 fails. *For 3 Position Step Control* 100PCT - Motor position set to 100% output position 0 PCT-Motor position set to 0% output position
MAN OUT	0 to 100%	POWER UP PRESET MANUAL OUTPUT — At power -up, the controller will go to manual, and the Output value set here.
AUTO OUT	0 to 100%	POWER UP PRESET AUTOMATIC OUTPUT — At power -up, the controller will begin its automatic control at the Output value set here.
PBorGAIN	PB PCT GAIN	PROPORTIONAL BAND UNITS — Select one of the following for the Proportional (P) term of the PID algorithm: PROPORTIONAL BAND — Selects units of percent proportional band for the P term of the PID algorithm. Where: $PB\% = \frac{100\%FS}{GAIN}$ GAIN selects the unitless term of gain for the P term of the PID algorithm. Where: $GAIN = \frac{100\%FS}{PB\%}$
MINorRPM	RPM MIN	RESET UNITS — Selects units of minutes or repeat per minutes for the I term of the PID algorithm. 20 Repeats per Minute = 0.05 Minutes per Repeat. REPEATS PER MINUTE — The number of times per minute that the proportional action is repeated by reset. MINUTES PER REPEAT — The time between each repeat of the proportional action by reset.

4.10 Options Set Up Group

Introduction

Configure the remote mode switch (Digital Inputs) to a specific contact closure response, or configure the Auxiliary Output to be a specific selection with desired scaling.

Table 4-9 lists all the function prompts in the Option setup group and their functions.

Table 4-9 Option Group Definitions

Lower Display Prompt	Upper Display Range of Setting or Selection	Parameter Definition
AUX OUT		**AUXILIARY OUTPUT SELECTION** provides an mA output representing any of six control parameters. The display for auxiliary output viewing will be in engineering units for Input 1, Input 2, Process Variable, Deviation, and Setpoint. Output will be displayed in percent. Other prompts affected by these selections: "4mA VAL" and "20mA VAL."
	DISABL	**NO AUXILIARY OUTPUT**
	IN 1	**INPUT 1** — This represents the configured range of Input 1. FOR EXAMPLE: Type "J" Thermocouple (0 to 1600°F) 0°F display = 0% output 1600°F display = 100% output
	IN 2	**INPUT 2** represents the value of the configured range of Input 2.
	PV	**PROCESS VARIABLE** — Represents the value of the Process Variable. PV = Input 1 + Bias
	DEV	**DEVIATION (PROCESS VARIABLE MINUS SETPOINT)** — Represents –100 to +100% of the selected PV span in engineering units. FOR EXAMPLE: Type "T" Thermocouple PV range = –300 to +700°F PV span = 1000°F Deviation Range = –1000 to +1000°F if PV = 500°F and SP = 650°F then Deviation Display = –150°F Auxiliary Output = 42.5% NOTE: A deviation of 0°F yields an auxiliary output of 50%.
	OUTPUT	**OUTPUT** — Represents the displayed controller output in percent (%). Cannot be used with 3 Position Step Control.
	SP	**SETPOINT** — Represents the value of the setpoint in units of PV.
	LSP 1	**LOCAL SETPOINT ONE** — Auxiliary output represents local setpoint one regardless of active setpoint.

Continued on next page

Table 4-9 Option Group Definitions, continued

Lower Display Prompt	Upper Display Range of Setting or Selection	Parameter Definition
4mA VAL	Low Scale Value within the range of the selected variable to represent 4 mA	**AUXILIARY OUTPUT LOW SCALING FACTOR** — Use a value in engineering units for: Input 1, Input 2, Process Variable, Deviation, and Setpoint. Use value in percent (%) for Output. (Output can be between −5 and +105%.)
20mA VAL	High Scale Value within the range of the selected variable to represent 20 mA	**AUXILIARY OUTPUT HIGH SCALING FACTOR** — Use a value in engineering units for: Input 1, Input 2, Process Variable, Deviation,* and Setpoint. Use a value in percent (%) for Output. (Output can be between −5 and +105%.) *When Deviation is selected, only one operating parameter will be entered. This value represents the deviation level that will produce 20 mA output. Zero deviation will produce a center scale (12 mA) output. A negative deviation equal in magnitude to the Auxiliary Output High Value will produce a low end (4 mA) output.
DIG IN 1 DIG IN 2		**DIGITAL INPUT SELECTIONS** — All selections are available for either input. The controller returns to its original state when contact opens, except when overruled by the keyboard.
	NONE	**NO DIGITAL INPUT SELECTIONS**
	To MAN	**TO MANUAL** — Contact closure puts the controller into manual mode. Contact open returns controller to former mode unless AUTO/MAN key is pressed while digital input is active.
	To LSP	**TO LOCAL SETPOINT** — Contact closure puts the controller into local setpoint 1. When contact opens, the controller returns to former operation local or remote setpoint unless Setpoint Select key is pressed while digital input is active.
	To 2SP	**TO LOCAL SETPOINT TWO** — Contact closure puts the controller into local setpoint 2.
	To DIR	**TO DIRECT ACTION** — Contact closure selects direct controller action.
	ToHOLD	**TO HOLD** — Contact closure suspends Setpoint Program or Setpoint Ramp. Contact open runs program.
	ToPID2	**TO PID2** — Contact closure selects PID Set 2.

Continued on next page

Table 4-9 Option Group Definitions, continued

Lower Display Prompt	Upper Display Range of Setting or Selection	Parameter Definition
DIG IN 1 DIG IN 2 continued	PV 2IN	PV = INPUT 2-Contact Closure selects PV = Input 2.
	To RUN	**RUN** — Contact closure starts a stopped SP Program. Left character blinks "R"
	ToBEGN	**EXTERNAL PROGRAM RESET** — Contact closure resets SP Program back to the beginning of the first segment in the Program. Program cycle number is not affected.reopening switch has no effect NOTE: Once the last segment of the setpoint program has timed out, the controller enters the mode of action specified in the configuration data and the program cannot be reset back to the beginning of the first segment by digital input closure.
	STOP I	**INHIBIT INTEGRAL (RESET)** — Contact closure disables PID Integral (Reset) action.
	MAN/FS	**MANUAL FAILSAFE** – Unit goes to Manual Mode, output goes to the Failsafe value.
	To LOCK	**KEYBOARD LOCKOUT** — Contact closure disables all keys. Lower display shows "LOCKED" if a key is pressed.
	To A OUT	**AUTOMATIC OUTPUT** — Contact closure sends output to the value set at Control prompt "AUTO OUT".
	TIMER	**TIMER** – Contact closure starts timer—if enabled.
	AM STA	**TO AUTO MANUAL STATION** – Contact closure causes switch to Auto Manual Station configuration.
DIG 1 COM DIG 2 COM		**DIGITAL INPUT COMBINATIONS SELECTIONS** — All selections are available can be combined with either input.
	DISABL	**DISABLES INPUT COMBINATIONS**
	+PID2	ANY DIGITAL INPUT SELECTION PLUS **TO PID2** — Contact closure selects PID Set 2.
	+To DIR	ANY DIGITAL INPUT SELECTION PLUS **TO DIRECT ACTION** — Contact closure selects direct controller action.
	+ToSP2	ANY DIGITAL INPUT SELECTION PLUS **TO LOCAL SETPOINT TWO** — Contact closure puts the controller into local setpoint 2.
	+DISAT	ANY DIGITAL INPUT SELECTION PLUS **DISABLE ADAPTIVE TUNE** — Contact closure disables Adaptive Tune process.

4.11 Communications Set Up Group

Introduction

This option allows the controller to be connected to a host computer via a RS422/485 or DMCS bus. Fifteen units can be configured over this link. The controller looks for messages from the computer at regular intervals. If these messages are not received within the configured shed time, the controller will SHED from the communications link and return to stand alone operation. The device address, parity, and baud rate are configurable. You can also set the SHED output mode and setpoint recall, and communication units.

Communications group prompts

Table 4-10 lists all the function prompts in the Communications setup group and their definitions.

Table 4-10 Communications Group Definitions

Lower Display Prompt	Upper Display Range of Setting or Selection	Parameter Definition
ComSTATE	RS-422/485 DMCS DISABL	**COMMUNICATIONS SELECTION** **RS-422/485** — Allows RS422/485 communication prompts. **DMCS** — Allows DMCS communication prompts. **DISABL** — Disables the communications option.
Com ADDR	1 to 99 (RS422) 1 to 99 (DMCS)	**COMMUNICATIONS STATION ADDRESS** — This is a number that is assigned to a controller that is to be used with the communications option.
SHEDTIME	0 to 255	**SHED TIME** — The number that represents how many sample periods there will be before the controller sheds from communications. Each period equals 1/3 seconds or 0 = No shed.
PARITY **(RS422/485 only)**	ODD EVEN	**PARITY** pertains to the use of a self-checking code employing binary digits in which the total number of ONE's (or ZERO's) in each permissible code expression is either ODD or EVEN. **ODD PARITY** **EVEN PARITY**
BAUD **(RS422/485 only)**	300 600 1200 2400 4800 9600 19200	**BAUD RATE** is the transmission speed in bits per second. **300 BAUD** **600 BAUD** **1200 BAUD** **2400 BAUD** **4800 BAUD** **9600 BAUD** **19200 BAUD**

Continued on next page

Table 4-10 Communications Group Definitions, continued

Lower Display Prompt	Upper Display Range of Setting or Selection	Parameter Definition
DUPLEX (RS422/485 only)	HALF FULL	DUPLEX - Transmission Type HALF DUPLEX - Two wires FULL DUPLEX - Four wires
TX DELAY (RS422/485 only)	1 to 500	TX DELAY – Configurable response–delay timer allows you to force the UDC to delay its response for a time period of from 1 to 500 milliseconds compatible with the host system hardware/software.
LOOPBACK	ENABLE DISABL	LOCAL LOOPBACK tests the communications hardware. ENABLE — Allows loopback test. The UDC goes into Loopback mode in which it sends and receives its own message. The UDC displays "PASS" or "FAIL" in the upper display and "LOOPTEST" in the lower display as long as the test is running. The UDC will go into manual mode. The test will run until the operator disables it here. DISABLE - disables the Loopback test.
SHEDMODE (DMCS only)	LAST TO MAN FSAFE ToAUTO	SHED CONTROLLER MODE AND OUTPUT LEVEL — determines the mode of local control you want when the controller is shed from the communications link. LAST -SAME MODE AS BEFORE SHED - The controller will return to the same mode (manual or automatic) that it was in before shed. TO MAN — TO MANUAL MODE BUMPLESS OUTPUT - The controller will return to manual mode at the same output level that it had before shed. FSAFE — TO MANUAL MODE, FAILSAFE OUTPUT - The controller will return to manual mode at the output value selected at "CONTROL" prompt "FAILSAFE". ToAUTO — To automatic mode.
SHED SP (DMCS only)	TO LSP TO CSP	SHED SP — Shed setpoint (DMCS only). TO LSP — Controller will use last local SP used. TO CSP — Controller will use computer setpoint.
UNITS	PERCNT ENG	COMMUNICATION UNITS — This selection determines how the controller values are expressed during communications. PERCENT OF SPAN ENGINEERING UNITS

4.12 Alarms Set Up Group

Introduction

An alarm is an indication that an event that you have configured (for example—Process Variable) has exceeded one or more alarm limits. There are two alarms available. Each alarm has two setpoints. You can configure each of these two setpoints to alarm on various controller parameters.

There are two alarm output selections, High and Low. You can configure each setpoint to alarm either High or Low. These are called single alarms.

You can also configure the two setpoints to alarm on the same event and to alarm both high and low. A single adjustable Hysteresis of 0 to 100% is configurable for the alarm setpoint.

See Table 2-4 in the Installation section for Alarm relay contact information.

Alarms group prompts

Table 4-11 lists all the function prompts in the Alarms setup group and their definitions.

Table 4-11 Alarms Group Definitions

Lower Display Prompt	Upper Display Range of Setting or Selection	Parameter Definition
A1S1 VAL	Value in Engineering Units	**ALARM 1 SETPOINT 1 VALUE** — This is the value at which you want the alarm type chosen in Prompt "A1S1TYPE" to actuate. The value depends on what the setpoint has been configured to represent. NO setpoint is required for Communications SHED. For SP Programming the value is the segment number for which the event applies. This prompt does not appear for "Alarm on Manual" type alarm. For example: A1S1TYPE = MANUAL.
A1S2 VAL	Value in Engineering Units	**ALARM 1 SETPOINT 2 VALUE** — This is the value at which you want the alarm type chosen in Prompt "A1S2TYPE" to actuate. The details are the same as "A1S1 VAL". This prompt does not appear for "Alarm on Manual" type alarm. For example: A1S1TYPE = MANUAL.
A2S1 VAL	Value in Engineering Units	**ALARM 2 SETPOINT 1 VALUE** — This is the value at which you want the alarm type chosen in Prompt "A2S1TYPE" to actuate. The details are the same as "A1S1 VAL".
A2S2 VAL	Value in Engineering Units	**ALARM 2 SETPOINT 2 VALUE** — This is the value at which you want the alarm type chosen in Prompt "A2S2TYPE" to actuate. The details are the same as "A1S1 VAL".

Continued on next page

Table 4-11 Alarms Group Definitions, continued

Lower Display Prompt	Upper Display Range of Setting or Selection	Parameter Definition
A1S1TYPE		ALARM 1 SETPOINT 1 TYPE — Select what you want Setpoint 1 of Alarm 1 to represent. It can represent the Process Variable, Deviation, Input 1, Input 2, Output, and if you have a model with communications, you can configure the controller to alarm on SHED. If you have setpoint programming, you can alarm when a segment goes ON or OFF.
	NONE	NO ALARM
	IN 1	INPUT 1
	IN 2	INPUT 2
	PV	PROCESS VARIABLE
	DEV	DEVIATION
	OUTPUT	OUTPUT (cannot be used with 3 Position Step control)
	SHED	SHED FROM COMMUNICATIONS
	EV ON	EVENT ON (SP PROGRAMMING)
	EV OFF	EVENT OFF (SP PROGRAMMING)
	MANUAL	ALARM ON MANUAL MODE (see Note 1)
A1S2TYPE	Same as A1S1 TYPE	ALARM 1 SETPOINT 2 TYPE — Select what you want Setpoint 2 of Alarm 1 to represent. The selections are the same as A1S1TYPE.
A2S1TYPE	Same as A1S1 TYPE	ALARM 2 SETPOINT 1 TYPE — Select what you want Setpoint 1 of Alarm 2 to represent. The selections are the same as A1S1TYPE. NOTE: Not applicable with Relay Duplex or Position Proportional outputs.
A2S2TYPE	Same as A1S1 TYPE	ALARM 2 SETPOINT 2 TYPE — Select what you want Setpoint 2 of Alarm 2 to represent. The selections are the same as A1S1TYPE. NOTE: Not applicable with Relay Duplex or Position Proportional outputs.
		ALARM 1 SETPOINT 1 STATE — Select whether you want the alarm type chosen in Prompt "A1S1TYPE" to alarm High or Low or the beginning or end of a segment in setpoint Ramp/Soak programming.
A1S1 H L	HI	HI ALARM
	LO	LO ALARM
A1S1 EV	BEGIN	BEGIN (SP PROGRAMMING)
	END	END (SP PROGRAMMING)

NOTE 1: Not available if Timer is enabled because Alarm 1 is dedicated to Timer output.

Continued on next page

Table 4-11 Alarms Group Definitions, continued

Lower Display Prompt	Upper Display Range of Setting or Selection	Parameter Definition
		ALARM 1 SETPOINT 2 STATE — Select whether you want the alarm type chosen in Prompt "A1S2TYPE" to alarm High or Low or the beginning or end of a segment in setpoint Ramp/Soak programming.
A1S2 H L **A1S2 EV**	HI LO BEGIN END	**HI ALARM** **LO ALARM** **BEGIN (SP PROGRAMMING)** **END (SP PROGRAMMING)**
		ALARM 2 SETPOINT 1 STATE — Select whether you want the alarm type chosen in Prompt "A2S1TYPE" to alarm HIGH or LOW or the beginning or end of a segment in setpoint Ramp/Soak programming.
A2S1 H L **A2S1 EV**	HI LO BEGIN END	**HI ALARM** **LO ALARM** **BEGIN (SP PROGRAMMING)** **END (SP PROGRAMMING)**
		ALARM 2 SET POINT 2 STATE — Select whether you want the alarm type chosen in Prompt "A2S2TYPE" to alarm HIGH or LOW or the beginning or end of a segment in setpoint Ramp/Soak programming.
A2S2 H L **A2S2 EV**	HI LO BEGIN END	**HI ALARM** **LO ALARM** **BEGIN (SP PROGRAMMING)** **END (SP PROGRAMMING)**
AL HYST	0.0 to 100% of span or full output as appropriate	**ALARM HYSTERESIS** — A single adjustable hysteresis is provided on alarms such that when the alarm is OFF it activates at exactly the alarm setpoint; when the alarm is ON, it will not deactivate until the variable is 0.0% to 100% away from the alarm setpoint. Configure the hysteresis of the alarms based on INPUT signals as a % of input range span. Configure the hysteresis of the alarm based on OUTPUT signals as a % of the full scale output range.

4.13 Calibration Data

Introduction

The prompts used here are for field calibration purposes. Refer to *Section 7 – Calibration* in this manual for complete information.

4.14 Status Test Data

Introduction

The prompts used here are for determining the reason for a controller failure. Refer to the *Section 9 – Troubleshooting* in this manual for complete information.

Section 5 – Operation

5.1 Overview

Introduction

This section gives you all the information necessary to monitor and operate your controller. Review the Operator Interface shown in "Monitoring" to make sure you are familiar with the indicator definitions. The key functions are listed in *Section 1 - Overview*.

What's in this section?

This section contains the following topics:

Topic		See Page
5.1	Overview	85
5.2	How to Power Up the Controller	86
5.3	How to Enter a Security Code	88
5.4	Monitoring Your Controller	89
	Operator Interface	89
	Decimal Point Position	89
	Viewing the Operating Parameters	90
	Diagnostic Error Messages	91
5.5	Start-up Procedure	92
5.6	Operating Modes	93
	Definitions	93
	Changing Operating Modes	93
	Selecting Manual or Automatic	94
	Position Proportional Backup Mode	95
5.7	Setpoints	96
	Selecting the Local Setpoint Source	96
	Changing the Local Setpoint	96
	Enabling the Remote Setpoint	97
	Switching between Setpoints	97
	Setpoint Selection Indication	98
5.8	Setpoint Ramp Rate	99
5,9	Single Setpoint Ramp	100
	Configuring the Ramp	100
	Running the Ramp	101
5.10	Using Two Sets of Tuning Constants	103
5.11	Alarm Setpoints	106
5.12	Three Position Step Control Algorithm	107
5.13	Digital Input Option (Remote Switching)	108
5.14	Auto/Manual Station	110
	Configuration	111
	Operation	113
5.15	Adaptive Tune	114
	Configuration	115
	Start-up mode	117
	SP Adapt	118
	Aborting Adaptive Tuning	118
	Re-tuning	118
	Error Codes	119

5.2 How to Power Up the Controller

Apply power

When power is applied, the controller will run three diagnostic tests. All the displays will light and then the controller will go into automatic mode.

Diagnostic tests

Table 5-1 lists the three diagnostic tests.

Table 5-1 Power Up Diagnostic Tests

Prompt on Lower Display	Condition
RAM TEST	Check RAM
CONFTEST	Check Non-volatile memory
CAL TEST	Check Calibration

Test failures

If one or more of these tests fail, the controller will go to the Fail-safe Manual Mode, and "FAILSAFE" will flash in the lower display.

If the output type is Position Proportional, and AUTO-CAL has never been done, a prompt "CALMTR" will appear suggesting that the controller be calibrated.

Troubleshooting

Refer to "STATUS TESTS" in *Section 9 - Troubleshooting* to identify and correct the problem.

Continued on next page

Check the displays and keys

Use the procedure in Table 5-2 to run the display and key test.

Table 5-2 Procedure for Testing the Displays and Keys

Press	Result
[SET UP] and hold in, then [FUNCTION] at the same time	The controller will run a display test. All the displays will light for 8 seconds, then the displays will look like this: Upper Display: keys Lower Display: try all
Press each key to see if it works	When the key is pressed, the lower display will indicate the name of the key pressed.

Key Pressed	Lower Display
FUNCTION	FUNCTION
LOWER DISPLAY	LWR DISP
MANUAL/AUTO	AUTO MAN
SETPOINT/SELECT	SP SEL
▲	INCRMENT
▼	DECRMENT
RUN/HOLD	RUN HOLD
▲+▼	INCRDECR
FUNCTION+SETUP	FUNC SU

If no key is presses for 20 seconds, the test will time out and the controller will go into control mode.

If any test fails, go to "Controller Failure Symptoms" in *Section 9 - Troubleshooting*.

Key error

When a key is pressed and the prompt "KEY ERROR" appears in the lower display, it will be for one of the following reasons:

- parameter not available,
- not in Set Up mode, press [SET UP] key first,
- Key malfunction, do keyboard test.

5.3 Enter a Security Code

Introduction

The LOCKOUT feature in the UDC 3000 is used to inhibit changes (via keyboard) of certain functions or parameters by unauthorized personnel. There are different levels of LOCKOUT depending on the level of security required. These levels are:

NONE
CALIBRATE
+CONF
+VIEWING
MAXIMUM

See *Section 4 - Configuration Definitions* for details.

Security code numbers

The level of keyboard lockout may be changed in the Set Up mode. However, knowledge of a security code number (1 to 4095) may be required to change from one level of lockout to another.
When a controller leaves the factory, it has a security code of 0 which permits changing from one lockout level to another without entering any other code number.

Procedure

If you require the use of a security code, select a number from 0001 to 4095 and enter it when the lockout level is configured as "NONE".
Thereafter, that selected number must be used to change the lockout level from something other than "NONE".

CAUTION Write the number on the Configuration Record Sheet in the configuration section so you will have a permanent record.

Use the procedure in Table 5-3 to enter a security code.

Table 5-3 Procedure for Entering a Security Code

Step	Press	Action
1	SET UP	Until you see Upper Display: SET UP Lower Display: TUNING
2	FUNCTION	Until you see Upper Display: 0 Lower Display: SECURITY
3	▲ or ▼	to enter a four digit number in the upper display (1 to 4095) This will be your security code.

5.4 Monitoring Your Controller

Operator Interface

The indicators and displays on the Operator Interface let you see what is happening to your process and how the controller is responding.

Figure 5-1 is a view of the Operator Interface. A description of the displays and indicators is included.

Figure 5-1 Operator Interface

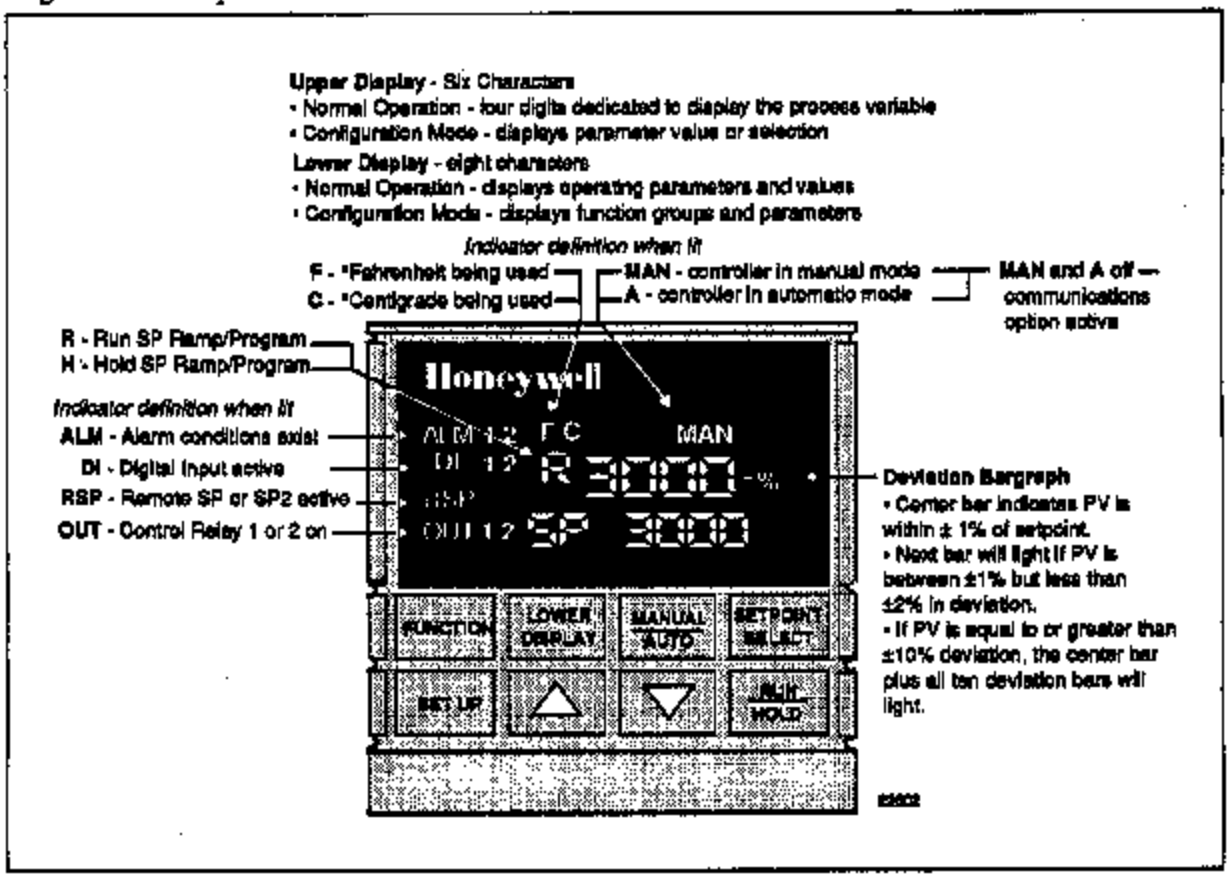

Decimal point position

In each display, when no decimal place is configured, the right-most character is blank.

When a single decimal position has been configured and values greater than 1000 are displayed, the right-most character is blank but the decimal point will be lit.

Continued on next page

Viewing the operating parameters

Press the LOWER DISPLAY key to scroll through the operating parameters listed in Table 5-4.
The lower display will show only those parameters and its value that apply to your specific model and the way in which it was configured.

Table 5-4 Lower Display Key Parameter Prompts

Prompt	Description
SP **	Local Setpoint 1
2SP **	Local Setpoint 2 (where remote setpoint does not apply)
RSP	Remote Setpoint (when available)
2IN	Input 2
DEV	PV deviation from setpoint (±999.9 maximum)
ZZRAXX.XX	Time remaining in Setpoint Ramp ZZ = Segment Number XX.XX = Hrs/Minutes
ZZSKXX.XX	Time remaining in Setpoint Soak ZZ = Segment Number XX.XX = Hrs/Minutes
PIDSETX **	Tuning Parameter Set X=1 or 2
OUT **	Output value in Percent (%); also 3PStep estimated motor position when no slidewire exists
CSP	Computer Setpoint (when setpoint is in override)
SPN	Setpoint Now (for setpoint rate)
POS	3 Position Step motor position when slidewire is connected
BIA	PD+MR algorithm output bias (same as manual reset value)
TR	Time remaining on timer
ET	Elapsed time on timer

**You can press ▲ or ▼ to change the value of this parameter.

Continued on next page

Diagnostic error messages

The UDC 3000 performs background tests to verify data and memory integrity. If there is a malfunction, an error message will be displayed.

In the case of more than one simultaneous malfunctions, only the one with the highest priority will appear on the lower display.

A list of error messages is contained in Table 5-5.

If any of these error messages occur, refer to *Section 9 - Troubleshooting* for information to correct the failure.

Table 5-5 Error Messages

Prompt	Description
EE FAIL	Unable to write to non-volatile memory
FAILSAFE	Failsafe
INP1FAIL	Two consecutive failures of input 1 integration
INP2FAIL	Two consecutive failures of input 2 integration
SW FAIL	Position Proportional slidewire input failure
CONF ERR	Low limit greater than high limit for PV, SP, Reset or Output
INP1 RNG	Input 1 out-of-range Linear: ±10% out-of-range Characterized: ±1% out-of-range
INP2 RNG	Input 2 ±10% out-of-range
PV LIMIT	PV ±10% out-of-range
RV LIMIT	Remote Variable out-of-range Note: RV = (input 1 x ratio) + bias
CAL MTR	Not calibrated. Perform Position Proportional Calibration

5.5 Start-up Procedure

Procedure

The Start-up procedure is given in Table 5-6.

Table 5-6 Procedure for Starting Up the Controller

Step	Operation	Press	Action
1	Select manual mode	MANUAL AUTO	until "MAN" indicator is ON. The controller is in manual mode.
2	Adjust the output	▲ or ▼	to adjust the output value and ensure that the final control element is functioning correctly. Upper Display ← shows the PV value. Lower Display ← shows OUT and the output value in %.
3	Tune the controller	SET UP	Make sure the controller has been configured properly and all the values and selections have been recorded on the Configuration Record Sheet. To tune your controller manually, see Section 11 - Appendix A. Refer to Set Up group "TUNING" to ensure that the proper selections for PROP BD or GAIN, RATE MIN, and RSET MIN or RSET RPM have been entered. For controllers with ADAPTIVE TUNE, see the procedure in this section.
4	Enter the local setpoint	LOWER DISPLAY	Upper Display ← shows the PV Value. Lower Display ← SP and the local setpoint value
		▲ or ▼	To adjust the local setpoint to the value at which you want the process variable maintained.
5	Select Automatic Mode	MANUAL AUTO	until "A" indicator is ON. The controller is in Automatic mode. The controller will automatically adjust the output to maintain the process variable at setpoint, if the controller is properly tuned.

5.6 Operating Modes

Available modes

The controller can operate in any of three basic modes:

- Manual
- Automatic with Local Setpoint
- Automatic with Remote Setpoint

Manual and Automatic with Local set point are standard features and Automatic with Remote Setpoint is optional.

Mode definitions

Table 5-7 lists the three modes and their definitions.

Table 5-7 Operating Mode Definitions

Operating Mode	Definition
MANUAL	When switched to manual mode, the controller holds its output at the last value used during automatic operation and stops adjusting the output for changes in setpoint or process variable. Instead, you adjust the output by changing the value shown in the lower display. See *"Selecting Modes"*.
AUTOMATIC with LOCAL SETPOINT	In automatic local mode, the controller will operate from the local setpoint and automatically adjust the output to maintain the setpoint at the desired value. In this mode you can adjust the setpoint. See 5.7 - *"Setpoints"*.
AUTOMATIC with REMOTE SETPOINT	In automatic remote mode, the controller will operate from the setpoint measured at input 2. Adjustments are available to ratio this input and add a constant bias before it is applied to the control equation. See *Section 3 - Configuration, Set up group "Control"*.

What happens when you change modes

Table 5-8 explains what happens to the controller when you switch from one mode to another.

Table 5-8 Changing Operating Modes

Mode Change	Description
Manual to Automatic Local Setpoint	The local setpoint is usually the value previously stored as the local setpoint. PV Tracking is a configurable feature which modifies this. When it is selected, the local setpoint value tracks the process variable value continuously while in manual. LSP=PV at the moment you switch from manual to automatic. LSP holds at this one value.
Manual or Auto Local to Automatic Remote SP	The second input value with Ratio and Bias applied is used to calculate the control setpoint.
Automatic Remote SP to Manual or Auto Local Setpoint	If configured for Local Setpoint Tracking, when the UDC transfers out of remote setpoint, the last value of the control setpoint is inserted into the local setpoint. If LSP tracking is not configured, the local setpoint will not be altered when the transfer is made.

Continued on next page

Selecting Manual or Automatic mode

An alternate action switch places the controller in Automatic or Manual mode of operation.

Switching between manual and automatic will be bumpless, except when PD+MR algorithm is selected.

Table 5-9 includes procedures for selecting automatic or manual mode and changing the output while in manual.

Table 5-9 Procedure for Selecting Automatic or Manual Mode

Step	Operation	Press	Action
1	Selecting Automatic Mode	MANUAL AUTO	until "A" indicator is ON. The controller regulates its output to maintain the PV at the desired setpoint. Upper Display → shows the PV value Lower Display → shows SP and the setpoint value The deviation bargraph indicates the PV deviation from the setpoint.
2	Selecting Manual Mode	MANUAL AUTO	until "MAN" indicator is ON. The controller holds its output at the last value used during automatic operation and stops adjusting the output for changes in setpoint or process variable. Upper Display → shows the PV value Lower Display → shows OUT and the output value in (%). The deviation bargraph indicates the PV deviation from the setpoint.
3	Adjust the Output in Manual Mode	▲ or ▼	to adjust the output value while in manual mode. Upper Display → shows the PV value Lower Display → shows OUT and the output value in %.
4	Return to Automatic Mode	MANUAL AUTO	The "A" indicator will appear indicating Automatic mode.

Continued on next page

Position Proportional Backup mode

This feature provides for Position Proportional models to automatically change to a Three Position Step algorithm if the slidewire input signal fails. This will maintain control of your process.

"IN2 RNG" or "SWFAIL" will flash in the lower display and the "OUT" display will show a estimated motor position WITHOUT a decimal point.

5.7 Setpoints

Introduction

You can configure the following setpoints for the UDC 3000 controller.

- A single local setpoint
- 2 local setpoints
- A local setpoint and a remote setpoint (Remote setpoint is an option)

These setpoint can be toggled by the SETPOINT/SELECT key.

Selecting the local setpoint source

Use the procedure in table 5-10 to select a single local setpoint source or two local setpoints.

Table 5-10 Procedure for Selecting the Local Setpoint Source

Step	Operation	Press	Action
1	Enter Set Up mode	SET UP	until the displays read: Upper Display: SET UP Lower Display: CONTROL
2	Display Local Setpoint Source selections	FUNCTION	until the displays read: Upper Display: ◄ Setpoint source selections Lower Display: SP SOURC 1 LOCAL 2 LOCAL
3	Select the desired source	▲ or ▼	to select the desired setpoint source in the upper display.
4	Return to control	LOWER DISPLAY	The controller will assume normal control.

Changing the local setpoints

Use the procedure in Table 5-11 to change either of the local setpoint value.

Table 5-11 Procedure for Changing the Local Setpoints

Step	Operation	Press	Action
1	Select the setpoint	LOWER DISPLAY	until you see Upper Display: ◄ The PV value Lower Display: ◄ SP or 2sp and the local setpoint value
2	Change the value	▲ or ▼	to change the local setpoint to the value at which you want the process maintained. The deviation bargraph indicates PV deviation from setpoint.

Continued on next page

Enabling (or disabling) the remote setpoint

Use the procedure in Table 5-12 to enable the remote setpoint source as Input 2.

Table 5-12 Procedure for Enabling (or disabling) the Remote Setpoint

Step	Operation	Press	Action
1	Select Set Up Group	SET UP	Until you see: Upper Display SET UP Lower Display CONTROL
2	Select the Remote Setpoint Source Prompt	FUNCTION	Until you see: Upper Display ◄ — The Remote Setpoint source selection Lower Display RSP SRC NONE - not used IN 2 - Input 2 as RSP
3	Change selection	▲ or ▼	to enable or disable the remote setpoint.
4	Return to normal operation	LOWER DISPLAY	This will return the controller to normal operation.

Switching between setpoints

You can switch between Local and Remote setpoints or between two Local setpoints when configured. Use the procedure in Table 5-13 to switch between setpoints.

Table 5-13 Procedure for Switching Between Setpoints

Step	Operation	Press	Action
1	Switch between Setpoints	SETPOINT SELECT	alternately select Local setpoint 1 and Remote setpoint or switch between the 2 Local Setpoints. or until you see the desired setpoint indicated ATTENTION "KEY ERROR" will appear in the lower display if the remote setpoint or 2nd local setpoint is not configured as a setpoint source, or if you attempt to change the setpoint while a setpoint ramp is enabled.

Continued on next page

Setpoint selection indication

Table 5-14 shows how the indicators react and what the displays show for each type of setpoint.

Table 5-14 Setpoint Selection Indication

	Using Local Setpoint	Using Remote Setpoint	Using 2nd Local Setpoint
RSP Indicator	OFF	ON	ON
Upper Display	PV	PV	PV
Lower Display	SP and the Local Setpoint Source	RSP and Remote Setpoint Value	SP2 and the 2nd Local Setpoint Value

5.8 Setpoint Rate

Configuration

You can configure a Setpoint Ramp Rate that will apply to any Local setpoint change immediately.

Refer to the Configuration Section to enable the ramp and set an upscale or downscale rate value.

Make sure SP RAMP and SP PROG are disabled.

Operation

When a Local setpoint change is made, the controller will ramp from the original setpoint to the new one at the rate specified. This changing (current) setpoint can be viewed on the lower display.

Press the [LOWER DISPLAY] key until you see SPn and the setpoint value in the lower display.

5.9 Single Setpoint Ramp

Configuring the setpoint ramp

You can configure a single setpoint ramp to occur between the current local setpoint and a final local setpoint over a time interval of from 1 to 255 minutes. You can RUN or HOLD the ramp at any time.

Procedure

Table 5-15 lists the procedure for configuring the Setpoint Ramp parameters. The procedure for **SP Program** is in *Section 6 – Setpoint Programming Option*.

Table 5-15 Procedure for Configuring a Setpoint Ramp

Step	Operation	Press	Action
1	Select SP RAMP Set Up Group	SET UP	Until you see: Upper Display: SET UP; Lower Display: SP RAMP
2	Select the Setpoint Ramp function	FUNCTION	Until you see: Upper Display: DISABL; Lower Display: SP RAMP
3	Enable Setpoint Ramp	▲	Until you see: Upper Display: ENABLE; Lower Display: SP RAMP NOTE: You cannot change the current local setpoint if the setpoint ramp function is enabled. Make sure SP RATE and SP PROG are disabled.
4	Set the Ramp Time	FUNCTION	Until you see: Upper Display: ◄ The ramp time in minutes; Lower Display: TIME MIN
		▲ or ▼	to change the upper display value to the number of minutes in which you want the final setpoint to be reached. Setting Range = 1 to 255 minutes NOTE: Entering "0" will imply an immediate step change to the final SP.
5	Set the Final Setpoint value	FUNCTION	Upper Display: ◄ The Final Setpoint value; Lower Display: FINAL SP
6		▲ or ▼	to change the upper display value to the desired final setpoint value. Setting Range = within the setpoint limits

Continued on next page

Running the setpoint ramp

Running a Setpoint Ramp includes starting, holding, viewing the ramp time, ending the ramp and disabling it.

Procedure

Table 5-16 lists the procedure for running the Setpoint Ramp.

Table 5-16 Procedure for Running a Setpoint Ramp

Step	Operation	Press	Action
1	Put the controller into Automatic mode	MANUAL AUTO	until "A" indicator is ON and you will see: Upper Display — H and the PV value Lower Display — SP and the present setpoint value
2	Set Start SP	▲ or ▼	until the start setpoint value you desire is indicated in the lower display: Upper Display — H and the PV value Lower Display — SP and the start setpoint value
3	Start the Ramp	RUN HOLD	You will see: Upper Display — R and the PV value Lower Display — SP and a changing setpoint value NOTE: The value in the lower display will be increasing or decreasing toward the final setpoint value. The PV value in the upper display will also change.
4	Hold the Ramp at the current value	RUN HOLD	This holds the ramp at the current setpoint value. Press again to continue run. A "KEY ERROR" prompt will appear if [RUN/HOLD] key is pressed while "SP RAMP" is disabled.
5	View the remaining ramp time	LOWER DISPLAY	Until you see: Upper Display — R or H and the PV value Lower Display — RAMP XXXM (Time remaining)

Procedure continued on next page

Procedure, continued

Table 5-16 Procedure for Running a Setpoint Ramp, continued

Step	Operation	Press	Action
6	End the Ramp		When the final setpoint is reached, the "R" changes to "H" in the upper display and the controller operates at the new setpoint. ATTENTION Anytime the local setpoint is different from the final setpoint value and the RUN/HOLD key is pressed - the ramp will start again.
7	Disable the setpoint ramp function	SET UP	Until you see: Upper Display SET UP Lower Display SP RAMP
		FUNCTION	You will see: Upper Display ENABLE Lower Display SP RAMP
		▲	Until you see: Upper Display DISABL Lower Display SP RAMP
8	Return to normal operating mode	LOWER DISPLAY	

5.10 Using Two Set of Tuning Constants

Introduction

You can use two set of tuning constants for single output types and choose the way they are to be switched.

The sets can be:

- Keyboard selected
- Automatically switched when a predetermined Process Variable value is reached.
- Automatically switched when a predetermined Setpoint value is reached.

The following procedures show you how to:

- Select two sets
- Set the switch-over value
- Set tuning constant value for each set
- Switch between two sets via the keyboard (without automatic switch-over)

Select two sets

The procedure in Table 5-17 tells you how to select two sets.

Table 5-17 Procedure for Selecting Two Set of Tuning Constants

Step	Operation	Press	Action
1	Select Control Set Up group	SET UP	Until you see: Upper Display SET UP Lower Display CONTROL
2	Select PID SETS function	FUNCTION	Until you see: Upper Display Available selections are listed below Lower Display PIDSETS 1 ONLY - 1 set of constants 2 KEYBD - 2 sets, keyboard selectable 2 PVSW - 2 sets, auto switch at PV value 2 SPSW - 2 sets, auto switch at SP value
		▲ or ▼	to select the type of PID SET.

Continued on next page

Set switch-over value

If you select 2 PVSW or 2 SPSW, you must set a value at which the sets will switch over.
The procedure in Table 5-18 shows you how to set this value.

Table 5-18 Procedure for Setting Switchover Values

Step	Operation	Press	Action
1	Select Switchover value function	FUNCTION assuming you are still in Set Up group "CONTROL"	Until you see: Upper Display [ ] ← The switchover value Lower Display [SW VALUE]
		▲ or ▼	to select the switch-over value in the upper display.

Set Tuning constant values for each set

There are specific tuning constant that must be set for each set. The procedure in Table 5-19 shows you how to access these constants and change their values.

Table 5-19 Procedure for Setting Tuning Constant Values

Step	Operation	Press	Action
1	Select Tuning Set Up Group	SET UP	Until you see: Upper Display [SET UP] Lower Display [TUNING]
2	Select the tuning constants	FUNCTION	to successively display the following constants: Upper Display [ ] ← The tuning constant value Lower Display [ ] ← PROP BD or GAIN* RATE* RSET* PROP BD2 or GAIN2** RATE 2** RSET2**
		▲ or ▼	To change the value of any of the above listed prompts in the lower display.

*PIDSET1 – will be used when PV or SP, whichever is selected, is greater than the switchover value.
**PIDSET2 – will be used when PV or SP, whichever is selected, is less than the switchover value.

Continued on next page

Switch between two sets via the keyboard (without automatic switch-over)

This procedure is operational only if 2 PID SETS was configured at "CONTROL" set up group.

The procedure in Table 5-20 shows you how to switch from one set to another.

Table 5-20 Procedure for switching PID SETS from the Keyboard

Step	Operation	Press	Action
1	Access the PID set display	LOWER DISPLAY	Until you see: Upper Display [ ] ← The PV value Lower Display [PIDSETX] X=1 or 2
		▲ or ▼	to change PID SET 1 to PID SET 2 or vice versa. You can use Adaptive Tune on each set.

5.11 Alarm Setpoints

Introduction

An alarm consists of a relay contact and an operator interface indication. The alarm relay is de-energized if Setpoint 1 or Setpoint 2 is exceeded.

The alarm relay is energized when the monitored value goes into the allowed region by more than the hysteresis.

The relay contacts can be wired for normally open (NO)-*energized* or normally closed (NC) de-energized at the rear terminals. See *Section 2 - Installation (Table 2-4)* for alarm relay contact information.

There are four alarm setpoints, two for each alarm.

The type and state (High or Low) is selected during configuration. See *Section 3 - Configuration* for details.

Procedure for displaying the alarm setpoints

Table 5-21 lists the procedure for displaying and changing the alarm setpoints.

Table 5-21 Procedure for Displaying or Changing the Alarm Setpoints

Step	Operation	Press	Action
1	Access the Alarm Set Up group	SET UP	Until you see: Upper Display SET UP Lower Display ALARMS
2	Access the Alarm Setpoint Values	FUNCTION	to successively display the alarm setpoints and their values. Their order of appearance is shown below. Upper Display The alarm setpoint value Lower Display A1S1 VAL = (Alarm 1, Setpoint 1 value) A1S2 VAL = (Alarm 1, Setpoint 2 value) A2S1 VAL = (Alarm 2, Setpoint 1 value) A2S2 VAL = (Alarm 2, Setpoint 2 value)
		▲ or ▼	to change any alarm setpoint value you select in the upper display.
3	Return to normal operation	LOWER DISPLAY	

5.12 Three Position Step Control Algorithm

Introduction

The Three Position Step Control algorithm allows the control of a valve (or other actuator) with an electric motor driven by two controller output relays; one to move the motor upscale, the other to move it downscale, without a feedback slidewire linked to the motor shaft. Adaptive Tune does not function with this algorithm.

Estimated motor position

The Three Position Step control algorithm provides an output display ("OUT") which is an estimated motor position since the motor is not using any feedback.

Although this output indication is only accurate to a few percent, it is corrected each time the controller drives the motor to one of its stops (0% or 100%).

It avoids all the control problems associated with the feedback slidewire (wear, dirt, noise).

When operating in this algorithm, the estimated "OUT" display is shown to the nearest percent (i.e. no decimal).

Accurate motor position

In the event that an accurate and repeatable indication in motor position is required, Position Proportional model's slidewire input can be used to read the motor position and display it on the lower display as "POS" while still operating in the Three Position Step control mode.
The slidewire must be calibrated for this to operate correctly.

Displaying the motor position

Table 5-22 lists the procedure for displaying the motor position.

Table 5-22 Procedure for Displaying the 3PSTEP Motor Position

Step	Operation	Press	Action
1	Access the displays	LOWER DISPLAY	Until you see: Upper Display The PV value Lower Display POS = 3PStep motor position with slidewire connected or OUT = Estimated 3PStep motor position when no slidewire exists

Power up output

When the controller powers up after a power outage, the position of the motor will correspond to whatever was configured at set up group prompt "CONTROL", function prompt "PWR OUT", selection LAST or FAILSAFE. Refer to Subsection 4.9, Table 4-8 for definition of each selection.

5.13 Digital Input Option (Remote Switching)

Introduction

The Digital Input option detects the state of external contacts for either of two inputs. On contact closure, the controller will respond according to how each digital input is configured.

Make your selection under Set Up group "OPTION", function group prompt "DIG IN1" or "DIG IN2". See *Section 3 - Configuration* .

Action on closure

Table 5-23 lists the configuration prompt selections, the "Action on Closure", and the display indication for each selection available.

Table 5-23 Digital Input Option Action on Contact Closure

DIG IN1 or DIG IN2 Selections	Display Indication	Action on Contact Closure*
None	DI 1 2 always off*	No Digital Input selection
To MAN	"MAN" blinks plus lower display switches to output (OUT)	Puts the controller into manual mode. Contact open returns the controller to former mode unless AUTO/MAN key is pressed while digital input is active.
To LSP		Puts the controller into local setpoint 1. When contact opens, the controller returns to former operation, local or remote setpoint, unless the SETPOINT/SELECT key is pressed while digital input is active.
To 2SP	"RSP BLOCK" blinks	Puts the controller into local setpoint 2. When contact opens, the controller returns to former operation, local or remote setpoint, unless the SETPOINT/SELECT key is pressed while digital input is active.
To DIR	None	Selects direct controller action.
ToHOLD	"H" blinks	Suspends setpoint program or setpoint ramp. Contact open runs the program or ramp.
ToPID2	PID2 in lower display	Selects PID2
PV 2IN		Selects the PV to equal input 2.
To RUN	"R" indicator blinks	Starts a stopped SP Program.
ToBEGN		Resets the Setpoint Program back to the beginning of the first segment in the program.
STOP I		Disables PID (I) integral action.

*The Digital Input Annunciator will always show the Digital Input status.

Continued on next page

Action on closure (continued)

Table 5-23 Digital Input Option Action on Contact Closure, Continued

DIG IN1 or DIG IN2 Selections	Display indication	Action on Contact Closure*
MANFS	"MAN" blinks plus lower display switches to output (OUT) and failsafe value.	Unit goes to Manual Mode, output goes to the Failsafe value.
To LOCK	"LOCKED" when key pressed	Disables all keys
To A OUT		Output goes to value set at control prompt "AUTO OUT".
TIMER	Timer clock ( ) and time appear in lower display.	Starts timer (momentary).
AM STA	IN blinks. "RSP BLOCK" blinks.	Causes switch to Auto Manual Station mode. Refer to Figure 5-2 in subsection 5.14 for auto manual station information.

Keyboard operation

If a particular mode or parameter is selected by the contact closure, using the keyboard to select the same parameter will ensure that the selected mode will be maintained after the remote digital switch is re-opened.

5.14 Auto/Manual Station

Introduction

When you select "AM STA" (auto manual station) under "OPTION" setup group, function prompt "DIG IN1" or "DIG IN2" (digital input option), contact closure on the selected digital input causes the controller to switch to Auto/Manual Station mode.

Function

As shown in Figure 5-2, State 2 is the "A/M Station mode" where the programmable logic controller (PLC) output is sent through the Auto/Manual Station. You can switch to manual and change the output at the controller. (It uses PIDSET2.)

State 1 is the "Backup PID mode" which is triggered by opening the Digital Input. (It uses PIDSET1.)

Figure 5-2 Auto/Manual Station and Backup Control Feature

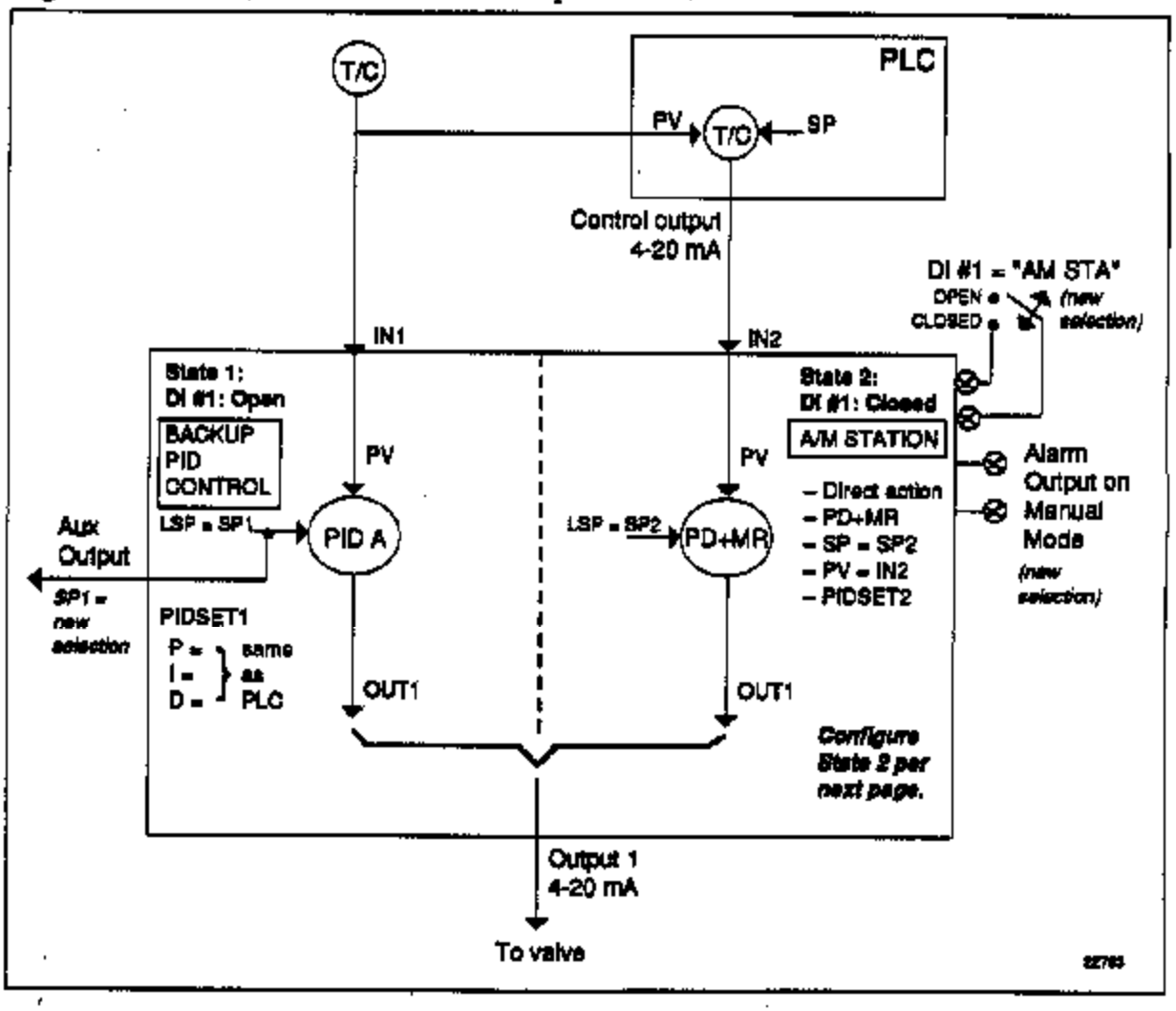

Continued on next page

Description

The "AM STA" selection of digital input creates a repeater station when the digital input is closed. This is accomplished by a multi-selection from the digital input menu.

- "ACTION" is forced as "DIRECT".
- "CONT ALG" is forced as "PD+MR".
- Active setpoint is forced to LSP2.
- The PV is switched to "PV 2IN".
- The tuning parameters used are the second set of parameters.

When the switch is open the unit becomes a normal controller with "CONT ALG" of "PID A", using tuning parameters set 1, LSP1, PV as IN1 and "DIRECT" or "REVERSE" as selected by customer configuration.

Input 1 is typically the PV of some upper controller and Input 2 is typically that controller's output.

If the upper control fails, the upper device or some watch dog opens the digital input switch and UDC 3000 back-up PID A control is active.

When the upper control reactivates, the digital input switch is closed and the Auto/Manual Station becomes a repeater station and allows the upper control output signal to pass through.

Configuration

There are some things to consider when configuring the controller.

The PV range stays as the IN1 range, even while IN2 is the PV when the switch is closed, therefore:

- The IN2 HI must be less than or equal to the IN1 HI.
  (Suggest: IN2 HI = 100.0)
- The IN2 LO must be greater than or equal to the IN1 LO.
  (Suggest: IN2 LO = 0.0)
- The TUNING GAIN2 must be equal to
  (IN1 HI – IN1 LO) / (IN2 HI – IN2 LO).

Continued on next page

Configuration (continued)

Refer to Table 5-24 and set up the controller in the order shown.

Table 5-24 Auto/Manual Station Mode Configuration Procedure

Step	Press SET UP to Select Setup Group	Press FUNC to Select Function Prompts	Press ▲ ▼ Enter Value or Selection	Remarks
1	Control	PID SETS	2 KEYBD	Select other control parameters as needed by the application.
		SP SOURCE	2 LOCAL	
		SP TRACK	NONE	
2	Algorithm	CONT ALG	PD+MR	This allows setting of the Manual Reset value.
3	Tuning	MAN RSET	50	Manual Reset of 0 with the Setpoint of 0 also works but only if the PLC controller is re-initialized when it is not in control.
4	Algorithm	CONT ALG	PID A	Defines Back-up Control Algorithm.
5	Tuning	RSET2MIN	50.00	
		GAIN2	See Note 1	Note 1. Set the Gain 2 equal to $\frac{\text{Input 1 Span}}{\text{Input 2 Span}}$ If "PB" is selected under "Control" setup group, function prompt "PBorGAIN", set the PROP BD2 to $100 \times \frac{\text{Input 2 Span}}{\text{Input 1 Span}}$
		RATE2MIN	0.00	Select PIDSET1 tuning parameters as needed by the application.
6	Options	DIG IN1 or DIG IN2	AM STA	

CAUTION

DO NOT SELECT

- In the CONTROL setup list, do not select SP TRACK as PV or RSP.
- In the SP RAMP setup list, do not select SP RATE as ENABLE.
- In the ALGORTHM setup list, do not select CONT ALG as PID B, ON-OFF, or 3PSTEP.
- In the Display menu when PIDSET# is displayed, DO NOT change the selection.

Continued on next page

Operation

Set the Local Setpoint 2 to 50% of the Input 2 range.

These features work with the Auto/Manual Station.

- In the SP RAMP setup list, SP PROG (acts on SP1 for backup operation).
- In the SP RAMP setup list, SP RAMP (acts on SP1 for backup operation).
- In the CONTROL setup list, ACTION as DIRECT or REVERSE for the backup PID A operation.

  The PD+MR Action is forced to be DIRECT as required for the pass through of the output signal.

5.15 Adaptive Tune (Accutune™)

Introduction

Adaptive Tune will continually adjust the Gain or Proportional Band (P), Reset (I), and Rate (D) tuning constants in response to setpoint changes.

Adaptive Tune handles all Local and Computer Setpoint changes.

How it works

Adaptive Tune uses time domain analysis, and the rule based expert system techniques to identify the two most dominant process lags plus any dead time.

It then automatically readjusts the PID parameters as necessary. It does this while controlling to setpoint in automatic (closed loop) control mode.

These calculated PID values can be changed, if desired, by disabling Adaptive Tune and entering different values.

Tuning can be aborted by pushing [Manual] key to return to manual mode.

Two criteria are available — "Normal" and "Fast".

Setpoint changes

During start-up, or whenever the setpoint changes beyond the "SP Change" value, Adaptive Tune employs time domain analysis to tune the process at any desired setpoint without any prior initialization or process knowledge.

Rules and regulations

The following is a list of rules and regulations for Adaptive Tune.
Adaptive Tune:

- can tune on all Local or Computer setpoints *except ramping setpoints*, i.e. cannot be done during SP Ramp or SP Program.
- will work only for algorithms PID-A or PID-B selections, i.e. it will NOT work with ON/OFF or Three Position Step control algorithms.
- is done in Automatic mode.
- can be monitored or reconfigured using communications option.
- can be disabled via Digital Inputs.
- can be aborted by going to Manual mode.
- cannot be done with Output Rate enabled.

When an SP Adaptive is in progress, a large "T" appears in the upper display and disappears as soon as the process is identified. During this time, no changes to the configuration parameters, including the setpoint, are permitted.

Continued on next page

Configuration

Before starting Adaptive Tune you must

- enable the Adaptive Tune feature
- set the minimum value of setpoint change in % of span that will result in re-tuning.

Procedure

Use the procedure in Table 5-25 to configure these items.

Table 5-25 Procedure for Configuring Adaptive Tune Parameters

Step	Operation	Press	Action
1	Select Adaptive Tune Set Up Group	SET UP	Until you see: Upper Display SET UP Lower Display ADAPTIVE
2	Select the type of Adaptive Tune	FUNCTION	You will see: Upper Display DISABLE, SP ONLY Lower Display ADAPTIVE DISABLE - Adaptive Tune disabled SP - Adaptive Tune will occur on setpoint changes only
		▲ or ▼	until the desired selection appears in the upper display.
3	Enter the setpoint change value	FUNCTION	until you see Upper Display Range: ±5 to 18% of PV Span Lower Display SP CHANG This is the minimum setpoint change value on which re-tuning will occur. Example: If the range is 0 to 2400, and 5% is configured here, re-tuning will occur if the setpoint change is 120 or larger.
		▲ or ▼	until the desired range appears in the upper display.

Table continued on next page

Procedure, continued

Table 5-25 Procedure for Configuring Adaptive Tune Parameters, Continued

Step	Operation	Press	Action
4	Verify or change the process Gain value	FUNCTION	You will see: Upper Display [ ] ← Range: 0.10 to 10.00 Lower Display [KPG] The Process Gain Value is normally a READ only value. It should only be changed if the controller fails to identify the process. In this case, set the value to the algebraic value of PV in percent, divided by output in percent, as displayed while in manual mode. [ATTENTION] For initial start-up, set this to 1.00.
		▲ or ▼	until the desired range appears in the upper display.
5	Verify Criteria	FUNCTION	You will see: Upper Display [ ] ← Fast Normal Lower Display [CRITERIA]
		▲ or ▼	to select fast or normal criteria.

Continued on next page

Start-up mode

At start-up, SP ADAPT tuning is used. The procedure for start-up is listed in Table 5-26.

Table 5-26 Procedure for Using Adaptive Tune at Start-up

Step	Operation	Press	Action
1	Put the controller into manual mode	MANUAL AUTO	Until the MAN indicator is ON. You will see: Upper Display: the PV value Lower Display: OUT XXXX
		▲ or ▼	to adjust the output value in the lower display, so that the PV lines out at least 10% of PV range and much lower than the normal setpoint setting.
2	Let PV stabilize		Allow the PV to stabilize (stop changing). Depending on the response time of the process, you may have to wait a while for the PV value to line out. Watch the displays for a stable condition.
3	Adjust the setpoint	LOWER DISPLAY	Until you see: Upper Display: the PV value Lower Display: SP XXXX
		▲ or ▼	to adjust the setpoint value in the lower display to the desired setpoint at which you plan to operate after Adaptive Tune is completed
			Example If the PV range is 0 to 2400 and the SP Change value is configured for 5%, tuning will occur if the setpoint is set greater or less than 120 of the stabilized PV value in Step 1.
4	Start SP ADAPT tuning	MANUAL AUTO	The controller will switch to automatic mode and the process will start to move toward the setpoint and will line out with the proper tuning constants. You will see: Upper Display: T XXXX — the PV value Lower Display: SP XXXX — the setpoint value A large "T" appears on the left side of the upper display to indicate that (SP ADAPT) Adaptive tune is in progress.

Continued on next page

SP ADAPT (after Start-up)

SP ADAPT will occur whenever the controller is in automatic mode and a setpoint change occurs which is greater than the previously configured minimum setpoint change value.

The controller will delay using any setpoint changes for 30 seconds to enable it to calculate whether to "SP ADAPT" or not. But, if the controller is toggled between LSP1 and LSP2 or if any other key (such as LOWER/DISPLAY) is pressed, the setpoint change is immediate.

A large "T" is displayed in the upper display whenever SP ADAPT mode is in progress. During this time, no changes to the configuration parameters, including the setpoint, are permitted.

Aborting Adaptive Tuning

If it is necessary to stop or abort the tuning, press the Manual/Auto key to return to Manual mode. This will cause an immediate abort of tuning.

Also, Adaptive Tune can be temporarily disabled by properly configuring a digital input.

Re-Tuning

The controller will evaluate current tuning as SP changes occur. When re-tuning is required, the controller operates in automatic mode and identifies new tuning constants.

At that point, the "T" disappears and tuning values are entered and used until re-tuning occurs again. The controller never goes into manual and does not bump the output to evaluate tuning requirements.

Note that if re-tuning was not required, no changes will be made; but, the "T" will still appear to indicate that Adaptive Tune algorithm is measuring the process response.

Continued on next page

Error code accessing procedure

When an error is detected in the Adaptive tune process, the message "AT ABORT" will appear in the lower display.

Access function prompt "AT ERROR" to determine what is causing the error. This procedure is listed in Table 5-27.

Table 5-27 Procedure for Accessing Adaptive Tune Error Codes

Step	Operation	Press	Action
1	Select Adaptive Tune Set Up Group	SET UP	Until you see: Upper Display SET UP Lower Display ADAPTIVE
2	Go to Error Code prompt	FUNCTION	You will see: Upper Display [ ] ← An error code Lower Display AT ERROR Table 5-28 lists all the Adaptive tune error codes and their definitions.

Error codes

Table 5-28 lists the Adaptive Tune error codes and their definitions.

Table 5-28 Adaptive Tune Error Code Definitions

Upper Display Prompt	Code Definition	Action to Take
NONE	NO ERRORS	None
OUTLIMIT	SP Adapt step is greater than high output limit or less than low output limit	• Check the output limits under Set Up group prompt "CONTROL", function prompts "OUTHILIM" and "OUTLOLIM" in Section 3 - *Configuration*. • Check "PROCESS GAIN". Refer to Table 6-25.
IDFAIL	Process Identification Failure	Try to SP Adapt again.
ABORT	• Manual abort has occurred – Adaptive tune will abort if the MAN/AUTO key is pressed during tuning • Automatic Abort has occurred – Adaptive tune will automatically abort when a PV oscillation has been detected during "SP ADAPT".	Try to SP Adapt again.
LOW PV	Occurs during a SP ADAPT when the output step calculated is too low to produce a PV value close to the desired setpoint.	NONE - After a period of about 5 minutes, the "SPADAPT" will be retried automatically with a larger output step.
RUNNING	Informational prompt indicating that "SP ADAPT" is still active checking process gain even though "T" is not lit. It does not affect the keyboard operation.	None

Section 6 – Setpoint Ramp/Soak Programming Option

6.1 Overview

What is programming?

The term "programming" is used here to identify the process for selecting and entering the individual ramp and soak segment data needed to generate the required setpoint versus time profile (also called a program).

A segment is a ramp or soak function which together make up a setpoint program. Setpoint Ramp/Soak Programming lets you configure 6 ramp and 6 soak segments to be stored for use as one program or several small programs. You designate the beginning and end segments to determine where the program is to start and stop.

Review program data and configuration

While the procedure for programming is straightforward, and aided by prompts, we suggest that you read *"Program Contents"* in this section as well as *"Section 3 - Configuration"* before doing the setpoint programming.

Fill out the worksheet

Draw a Ramp/Soak Profile on the worksheet provided and fill in the information for each segment. This will give you a record of how the program was developed.

What's in this section

The table below lists the topics that are covered in this section.

	Topic	See Page
6.1	Overview	121
6.2	Program Contents	122
6.3	Drawing a Ramp/Soak Profile	124
	Example	124
	Program Record Sheet	125
6.4	Entering the Setpoint Program Data	126
	Introduction	126
	General Procedure	126
	Alarms on Setpoint Programs	126
	Prompt Hierarchy and Selections	127
6.5	Run/Monitor the Program	129
	Introduction	129
	Run/Monitor Functions	129
	Set the Local Setpoint	129
	Run State	129
	Hold State	129
	External Hold	129
	External Program Reset	130
	Viewing the Present Segment Number and Time	130
	Viewing cycles	130
	End Program	131
	Power-up State	131

6.2 Program Contents

What you will configure

Basically, you will configure all the data that is relevant to each ramp and soak segment for a given setpoint versus time profile. The controller will prompt you through the sequence of segments and associated functions.

Ramp segments

A ramp segment is the time it will take to change the setpoint to the next setpoint value in the program.

Ramps are odd number segments. Segment #1 will be the initial ramp time.

Ramp time is determined in either:

TIME* - Hours:Minutes Range = 0-99hrs:59 min.

or

RATE* - EU/MIN or EU/HR Range = 0 to 999

* This selection of time or rate is made at prompt "RAMP UNIT".

Set this prompt before entering any Ramp.

ATTENTION When Ramp Unit is configured fot TIME, entering "0" will imply an immediate step change in setpoint to the next soak.

Soak segments

A soak segment is a combination of soak setpoint (value) and a soak duration (time).

Soaks are even number segments.

Segment 2 will be the initial soak value and soak time.

The soak setpoint range value must be within the setpoint high and low range limits in engineering units.

SOAK TIME is the duration of the soak and is determined in:

TIME - Hours:Minutes RANGE = 0-99hrs:59 min.

Start segment number

This designates the number of the first segment.
Range = 1 to 11

End segment number

This designates the number of the last segment. It must be a soak segment (even number).
Range = 2 to 12

Recycle number

This number allows the program to recycle a specified number of times from beginning to end.
Range = 0 to 99

Continued on next page

Guaranteed Soak

Each soak segment can have a deviation value of from 0 to ±99 which guarantees the value for that segment.

Guaranteed soak segment values >0 guarantee that the segments process variable is within the ± deviation for the configured soak time. Whenever the ± deviation is exceeded, soak timing is frozen.

There are no guaranteed soaks whenever the deviation value is configured to 0, i.e., soak segments start timing soak duration as soon as the soak setpoint is first reached, regardless of where the process variable remains relative to the soak segment.

The value is the number in engineering units, above or below the setpoint, outside of which the timer halts. The range is 0 to +99.00.

The decimal location corresponds to input 1 decimal selection.

Program state

This selection determines the program state after completion.

The selections are:

DISABL = Program is disabled

HOLD = Program on hold

Program termination state

This function determines the status of the controller upon completion.

The selections are:

LAST SP = controls to last setpoint and last control mode

F SAFE = Manual mode, Failsafe Output

ATTENTION If power is lost during a program, upon power-up the controller will be in hold and the setpoint value will be the setpoint value prior to the beginning of the setpoint program. The program is placed in hold at the beginning of the first segment in the program.

Ramp unit

This determines the engineering units for the ramp segments.

The selections are:

TIME = Hours:Minutes

RATE = EU/MIN or EU/HR

ATTENTION This selection cannot be changed while a program is in operation.

ATTENTION

Accutune will not function during Setpoint programming.

6.3 Drawing a Ramp/Soak Profile

Ramp/Soak Profile example

Before you do the actual configuration, we recommend that you draw a Ramp/Soak profile in the space provided on the "*Program Record Sheet*" (Figure 6-2) and fill in the associated information.
An example of a Ramp/Soak Profile is shown in Figure 6-1.

Figure 6-1 Ramp/Soak Profile Example

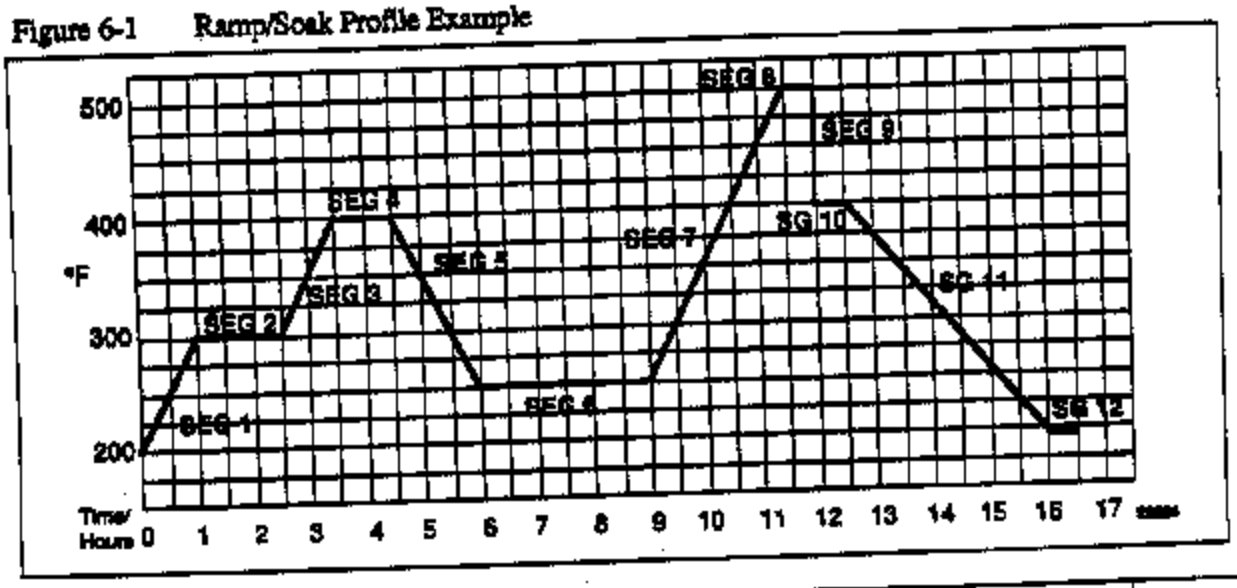

Prompt	Function	Segment	Value	Prompt	Function	Segment	Value
STRT SEG	Start Seg.		1	SEG7RAMP	Ramp Time	7	2hrs:30min.
END SEG	End Seg.		12	SEG8 SP	Soak SP	8	500
RECYCLES	Number of Recycles		2	SEG8TIME	Soak Time	8	0hr.:30 min.
SOAK DEV	Deviation Value		0	SEG9RAMP	Ramp Time	9	0
SEG1RAMP	Ramp Time	1	1 hr.	SG10 SP	Soak SP	10	400
SEG2 SP	Soak SP	2	300	SG10 TIME	Soak Time	10	0hr.:30 min.
SEG2TIME	Soak Time	2	1hr.:30 min.	SG11RAMP	Ramp Time	11	3hrs:30min.
SEG3RAMP	Ramp Time	3	1hr.	SG12 SP	Soak SP	12	200
SEG4 SP	Soak SP	4	400	SG12TIME	Soak Time	12	0hr.:30 min.
SEG4TIME	Soak Time	4	1 hr.	STATE	Controller State at end		HOLD
SEG5RAMP	Ramp Time	5	1hr.:30 min.	PROG END	Controller Status		LAST SP
SEG6 SP	Soak SP	6	250	RAMP UNIT	Engr. Unit for Ramp		TIME
SEG6TIME	Soak Time	6	3hrs.:0min.				

Continued on next page

Prompt Hierarchy

Table 6-2 lists all the function prompts for Setpoint Program data configuration in the order of their appearance.
Follow the procedure in table 6-1 to transfer the data from your setpoint Ramp/Soak profile into the controller.
All parameters may be changed while the program is disabled or in HOLD.

Table 6-2 Prompt Hierarchy and Available Selections

Prompt	Definition	Value or Selection (use ▲ or ▼)
SP RAMP	Setpoint Ramp selection	*Selections*: DISABLE **SP RAMP must be disabled to allow Setpoint Programming.**
SP RATE	Setpoint Rate of Change	*Selections*: DISABLE **SP RATE must be disabled to allow Setpoint Programming.**
SP PROG	Setpoint Ramp/Soak Programming	*Selections*: ENABLE DISABLE **SP PROG must be enabled to view the remaining prompts.**
STRT SEG	Start Segment Number	*Enter Value*: 1 to 11
END SEG	End Segment Number	*Enter Value*: 2 to 12 Always end in a soak Segment (2,4,.....12)
RECYCLES	Number of Program Recycles	*Enter Value*: 0 to 99 recycles
SOAK DEV	Guaranteed Soak Deviation Value	*Enter Value*: 0 to +99.00 The number selected will be 0 to 99± from setpoint.
SEG1RAMP or **SEG1RATE**	Segment #1 Ramp Time Segment #1 Ramp Rate	*Enter Value*: Ramp Time = 0-99hrs:0-59min, or Ramp Rate = Engineering units/min or Engineering units/hr **Select TIME, EU/MIN, or EU/HR at prompt "RAMP UNIT".** **All ramps will use the same selection.**
SEG2 SP	Segment #2 Soak Setpoint Value	*Enter Value*: Within the Setpoint limits
SEG2TIME	Segment #2 Soak Duration	*Enter Value*: 0-99hrs:0-59min
SEG3RAMP or **SEG3RATE**	Segment #3 Ramp Time Segment #3 Ramp Rate	*Enter Value*: Ramp Time = 0-99hrs:0-59min, or Ramp Rate = EU/MIN or EU/HR
SEG4 SP	Segment #4 Soak Setpoint Value	*Enter Value*: Within the Setpoint limits
SEG4TIME	Segment #4 Soak Duration	*Enter Value*: 0-99hrs:0-59min

Continued on next page

Prompt Hierarchy (continued)

Table 6-2 Prompt Hierarchy and Available Selections, continued

Prompt	Definition	Value or Selection (use ▲ or ▼)
SEG5RAMP or SEG5RATE	Segment #5 Ramp Time Segment #5 Ramp Rate	*Enter Value*: Ramp Time = 0-99hrs:0-59min, or Ramp Rate = EU/MIN or EU/HR
SEG6 SP	Segment #6 Soak Setpoint Value	*Enter Value*: Within the Setpoint limits
SEG6TIME	Segment #6 Soak Duration	*Enter Value*: 0-99hrs:0-59min
SEG7RAMP or SEG7RATE	Segment #7 Ramp Time Segment #7 Ramp Rate	*Enter Value*: Ramp Time = 0-99hrs:0-59min, or Ramp Rate = EU/MIN or EU/HR
SEG8 SP	Segment #8 Soak Setpoint Value	*Enter Value*: Within the Setpoint limits
SEG8TIME	Segment #8 Soak Duration	*Enter Value*: 0-99hrs:0-59min
SEG9RAMP or SEG9RATE	Segment #9 Ramp Time Segment #9 Ramp Rate	*Enter Value*: Ramp Time = 0-99hrs:0-59min, or Ramp Rate = EU/MIN or EU/HR
SG10 SP	Segment #10 Soak Setpoint Value	*Enter Value*: Within the Setpoint limits
SG10TIME	Segment #10 Soak Duration	*Enter Value*: 0-99hrs:0-59min
SG11RAMP or SG11RATE	Segment #11 Ramp Time Segment #11 Ramp Rate	*Enter Value*: Ramp Time = 0-99hrs:0-59min, or Ramp Rate = EU/MIN or EU/HR
SG12 SP	Segment #12 Soak Setpoint Value	*Enter Value*: Within the Setpoint limits
SG12TIME	Segment #12 Soak Duration	*Enter Value*: 0-99hrs:0-59min
STATE	Program state at program end	*Selections*: DISABLE HOLD(hold mode)
PROG END	Program Termination State	*Selections*: LAST SP - Hold at last setpoint in the program F SAFE - Manual mode/Failsafe output
RAMPUNIT	Engineering units for ramp segments	*Selections*: TIME EU/MIN EU/HR

6.5 Run/Monitor the Program

Introduction

Make sure all the "SP PROG" function prompts under the Set Up group "SP RAMP" have been configured with the required data.
An "H" will appear in the upper display indicating that the program is in the HOLD state.

Run/Monitor functions

Table 6-3 lists all the functions required to run and monitor the program.

Table 6-3 Run/Monitor Functions

Function	Press	Result
Set the Local Setpoint	SETPOINT SELECT	You will see Upper Display Lower Display SP —8— Local Setpoint Value
	▲ or ▼	To set the Local Setpoint value to where you want the program to start out.
Run State	RUN HOLD	Initiates the setpoint program. An "R" appears in the upper display indicating that the program is running.
Hold State	RUN HOLD	Holds the setpoint program. An "H" appears in the upper display indicating that the program is in the HOLD state. The setpoint holds at the current setpoint.
External Hold		If Remote Switching (Digital Input Option) is present on your controller, contact closure places the controller in the HOLD state, if the setpoint program is running. The "H" in the upper display will blink. ATTENTION The keyboard takes priority over external switch for the RUN/HOLD function. Contact reopening runs program.
Changing a Segment while in Hold	▲ or ▼	These keys will operate and allow you to change the segment number while in HOLD. If a different segment is selected, it will be started at the beginning when placed in RUN. If the original segment is brought back, it will continue from the point placed in HOLD. NOTE: changing a segment number may affect the alarms/events.

Continued on next page

Run/Monitor functions (continued)

Table 6-3 Run/Monitor Functions, continued

Function	Press	Result
External Program Reset		If Remote Switching (Digital Input Option) is present on your controller, contact closure resets the SP Program back to the start of the first segment. Program cycle number is not affected. Reopening the contact has no effect.
	RUN HOLD	restarts the Setpoint Program
Viewing the present ramp or soak segment number and time	LOWER DISPLAY until you see	Upper Display "R" and the PV value Lower Display For Ramp segments: #RA XXXX Ramp Time - Hours:Minutes or Ramp Rate - Degrees/Minute Indicates Ramp segment Segment Number (odd only) For Soak segments: #SK XXXX Time remaining in segment in Hrs:Minutes including current partially completed minute Indicates Soak segment Segment Number (even only)
Viewing the number of cycles left in the program	LOWER DISPLAY until you see	Upper Display "R" and the PV value Lower Display RECYC XX Remaining Cycles 0 to 99 This number includes the current partially completed cycle.

Continued on next page

Run/Monitor functions (continued)

Table 6-3 Run/Monitor Functions, continued

Function	Press	Result
End Program		When the final segment is completed, the "R" in the upper display either changes to "H" if configured for HOLD state, or disappears if configured for disable of setpoint programming. The controller operates at the last setpoint in the program in automatic or will be in manual mode at the failsafe output.

Power-up state

The program will be placed in HOLD mode at the beginning of the program at the local Setpoint value prior to the beginning of the program.

Section 7 – Input Calibration

7.1 Overview

Introduction

This section describes the field calibration procedures for Input 1 and Input 2.
Every UDC 3000 controller contains all input actuation ranges fully factory calibrated and ready for configuration to range by the user.
However these procedures can be implemented if the factory calibration of the desired range is not within specifications.
Note that the field calibration will be lost if a change in input type configuration is implemented at a later time. The original factory calibration data remains available for later use after a field calibration is done.

What's in this section

This section contains the following topics:

	Topic	See Page
7.1	Overview	133
7.2	Minimum and maximum range values	134
7.3	Preliminary Information • Disconnect the field wiring • Equipment needed	135 135 136
7.4	Input 1 Set Up Wiring • Thermocouple inputs using an ice bath • Thermocouple inputs using a precision resistor • RTD (Resistance Thermometer Device) inputs • Radiamatic, Millivolts, or Volts except 0-10 Volts inputs • 0 to 10 Volts input • 4-20 Milliamps input	137 137 138 139 140 141 142
7.5	Input 1 Calibration Procedure	143
7.6	Input 2 Set Up Wiring • 4-20 Milliamps input • 1 to 5 Volts input	145 145 146
7.7	Input 2 Calibration Procedure	147

WARNING—SHOCK HAZARD

INPUT CALIBRATION MAY REQUIRE ACCESS TO HAZARDOUS LIVE CIRCUITS, AND SHOULD ONLY BE PERFORMED BY QUALIFIED SERVICE PERSONNEL. MORE THAN ONE SWITCH MAY BE REQUIRED TO DE-ENERGIZE UNIT BEFORE CALIBRATION.

7.2 Minimum and Maximum Range Values

Select the range values

You should calibrate the controller for the minimum (0%) and Maximum (100%) range values of your particular sensor.
If you have a two input controller, calibrate each input separately.
Select the Voltage or Resistance equivalent for 0% and 100% range values from Table 7-1. Use these value when calibrating your controller.

Table 7-1 Voltage and Resistance Equivalents for 0% and 100% Range Values

Sensor Type	PV Input Range		Range Values	
	°F	°C	0%	100%
B Thermocouple	0 to 3300	–18 to 1815	–0.100 mV	13.763 mV
E Thermocouple	-454 to 1832	–270 to 1000	–9.835 mV	76.358 mV
E (low) Thermocouple	-200 to 1100	–129 to 593	–6.471 mV	44.547 mV
J Thermocouple	0 to 1600	–18 to 871	–0.885 mV	50.059 mV
J (low) Thermocouple	20 to 770	–7 to 410	–0.334 mV	22.397 mV
K Thermocouple	0 to 2400	–18 to 1316	–0.692 mV	52.939 mV
K (low) Thermocouple	–20 to 1000	–29 to 538	–1.114 mV	22.251 mV
NiNiMoly T/C	32 to 2500	0 to 1371	–0.001 mV	71.330 mV
NiNiMoly (low) T/C	32 to 1260	0 to 682	–0.001 mV	31.820 mV
Nicrosil Nisil T/C	0 to 2372	–18 to 1300	–0.461 mV	47.502 mV
R Thermocouple	0 to 3100	–18 to 1704	–0.089 mV	20.275 mV
S Thermocouple	0 to 3100	–18 to 1704	–0.092 mV	17.993 mV
T Thermocouple	-300 to 700	–184 to 371	–5.341 mV	19.095 mV
T (low) Thermocouple	-200 to 500	–129 to 260	–4.149 mV	12.572 mV
W5W26 T/C	0 to 4200	–18 to 2316	–0.234 mV	37.066 mV
W5W26 (low) T/C	0 to 2240	–18 to 1227	–0.234 mV	22.277 mV
RTD (IEC=0.00385) 100 Ohms 100 Ohms (low) 500 Ohms	 -300 to 1200 0 to 300 -300 to 1200	 –184 to 649 –18 to 149 –184 to 649	 25.18 Ω 93.03 Ω 125.90 Ω	 329.16 Ω 156.90 Ω 1645.80 Ω
Radiamatic (RH)	1400 to 3400	760 to 1671	0.99 mV	57.12 mV
Milliamps	4 to 20 mA		4 mA	20 mA
Millivolts	0 to 10 mV		0 mV	10 mV
	10 to 50 mV		10 mV	50 mV
Volts	1 to 5 Volts		1 Volt	5 Volts
	0 to 10 Volts		0 Volts	10 Volts

7.3 Preliminary Information

Calibration steps

Use the following steps when calibrating an input.

Step	Action
1	Find the minimum and maximum range values for your PV input range from Table 7-1.
2	Disconnect the field wiring and find out what equipment you will need to calibrate. DO NOT remove external resistor assemblies (if present).
3	Wire the calibrating device to your controller according to the Set Up wiring instructions for your particular input.
4	Follow the calibration procedure given for Input #1 or Input #2.

Disconnect the field wiring

Depending on which input (#1 or #2) you are going to calibrate, tag and disconnect any field wiring connected to the input terminals on the rear of the controller.

Figure 7-1 shows the wiring terminal designations for Input #1 and Input #2.

Figure 7-1 Input #1 and #2 Wiring Terminals

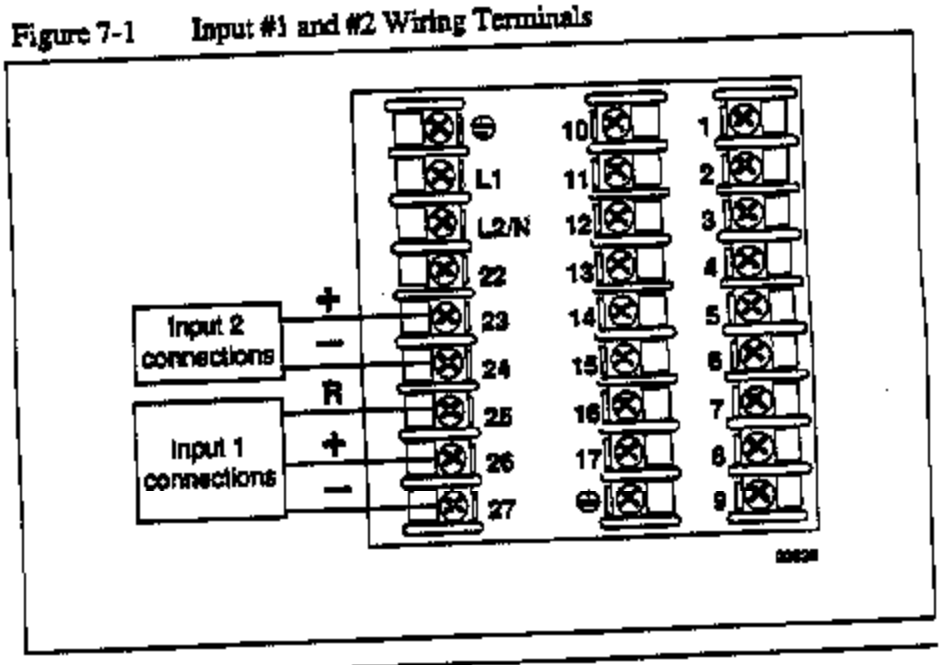

Continued on next page

Equipment needed

Table 7-2 lists the equipment you will need to calibrate the specific types of inputs that are listed in the table. You will need a screwdriver to connect these devices to your controller.

Table 7-2 Equipment Needed

Type of Input	Equipment Needed
Thermocouple Inputs (Ice Bath)	• A calibrating device with ±0.02% accuracy for use as a signal source such as a millivolt source. • Thermocouple extension wire that corresponds with the type of thermocouple that will be used with the controller input. • Two insulated copper leads for connecting the thermocouple extension wire from the ice baths to the precision calibrator. • Two containers of crushed ice.
Thermocouple Inputs (Precision Resistor)	• A calibrating device with ±0.02% accuracy for use as a signal source such as a millivolt source. • Two insulated copper leads for connecting the calibrator to the controller. • A precision 500 ohm resistor ±0.1% connected across input #1 terminals 25(R) and 27(–).
RTD (Resistance Thermometer Device)	• A decade box, with ±0.02% accuracy, capable of providing stepped resistance values over a minimum range of 0 to 1400 Ohms with a resolution of 0.1 ohm. • Three insulated copper leads for connecting the decade box to the controller.
Milliampere, Millivolt, Volts, and Radiometric	• A calibrating device with ±0.02% accuracy for use as a signal source. • Two insulated copper leads for connecting the calibrator to the controller. • Place current source at zero before switching ON. • Do not switch current sources OFF/ON while connected to the UDC 3000 input.

7.4 Input #1 Set Up Wiring

Thermocouple inputs using an ice bath

Refer to Figure 7-2 and wire the controller according to the procedure given in Table 7-3.

Table 7-3 Set Up Wiring Procedure for Thermocouple Inputs Using An Ice Bath

Step	Action
1	Connect the copper leads to the calibrator.
2	Connect a length of thermocouple extension wire to the end of each copper lead and insert the junction points into the ice bath.
3	Connect the thermocouple extension wires to the terminals for input #1. See Figure 7-2.

Figure 7-2 Wiring Connections for Thermocouple Inputs Using an Ice Bath

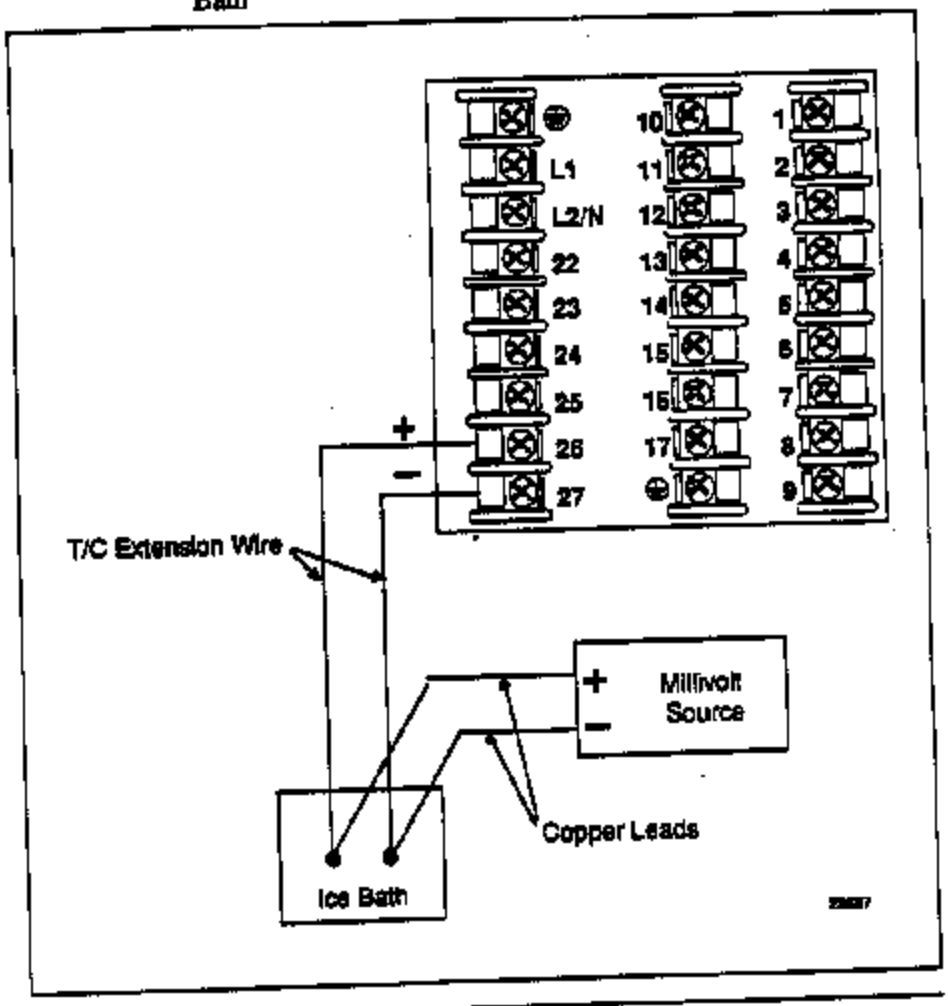

Continued on next page

Thermocouple inputs using a precision resistor

Refer to Figure 7-3 and wire the controller according to the procedure given in Table 7-4.

Table 7-4 Set Up Wiring Procedure for Thermocouple Inputs Using a Precision Resistor

Step	Action
1	Connect the copper leads to the calibrator.
2	Disconnect the cold junction resistor.
3	Install a 500 Ohm precision resistor across terminal 25 (R) and terminal 27 (–). See Figure 7-3.
4	Subtract the millivolt value for 77°F (25°C) from the zero and span value for your range (see Table 7-1 for zero and span values) and use the adjusted value when calibrating.

Figure 7-3 Wiring Connections for Thermocouple Inputs Using a Precision Resistor

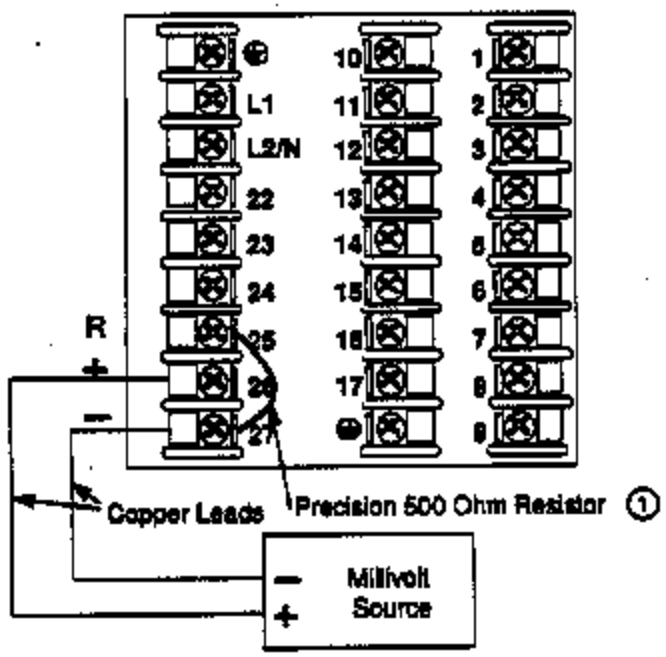

① **Caution:** The accuracy of the controller is directly affected by the accuracy of this resistor. At a minimum, use a 0.1%, 25ppm resistor.

Continued on next page

RTD Inputs

Use the copper leads and connect the calibrator to the rear terminals of Input #1. See Figure 7-4.

Figure 7-4 Wiring Connections for RTD (Resistance Thermometer Device)

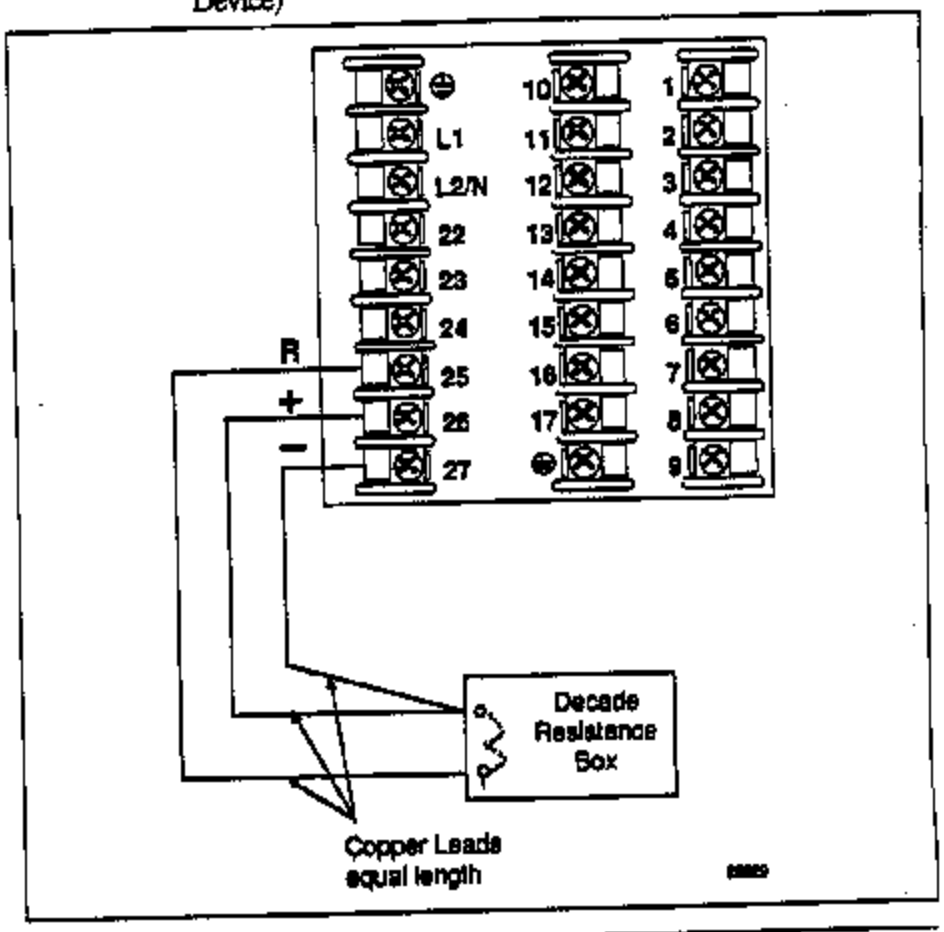

Continued on next page

Radiamatic, Millivolts, or Volts (except 0 to 10 Volts) Inputs

Use the copper leads and connect the calibrator to the rear terminals of Input #1. See Figure 7-5.

Figure 7-5 Wiring Connections for Radiamatic, Millivolts, or Volts (except 0 to 10 Volts)

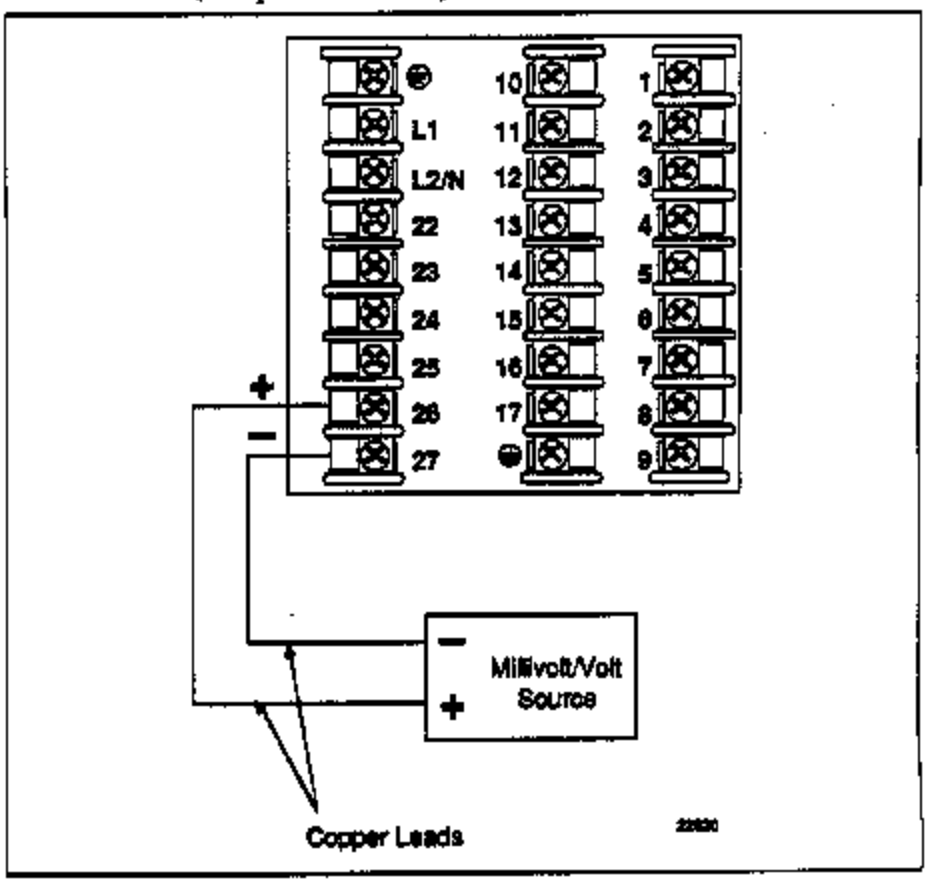

Continued on next page

0 to 10 Volt Inputs

Use the copper leads and connect the calibrator to the rear terminals of Input #1. See Figure 7-6.

Figure 7-6 Wiring Connections for 0 to 10 Volt inputs

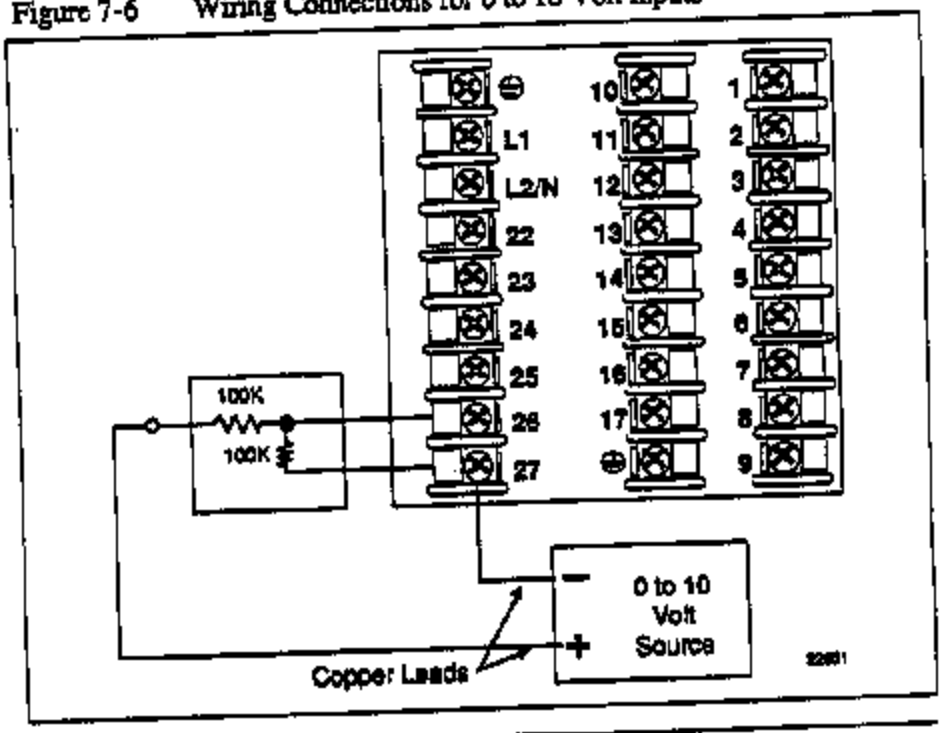

Continued on next page

4 to 20 mA inputs

Use the copper leads and connect the calibrator to the rear terminals of Input #1. See Figure 7-7.

Figure 7-7 Wiring Connections for 4 to 20 mA inputs

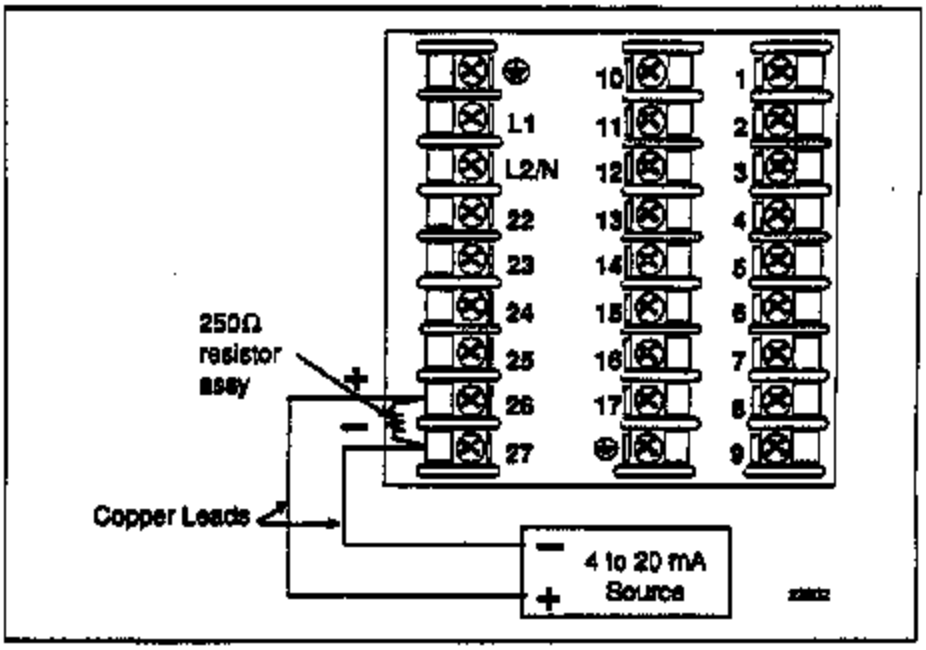

7.5 Input #1 Calibration Procedure

Introduction

Apply power and allow the controller to warm up for 15 minutes before you calibrate.
Please read "*Set Up Wiring*" before beginning the procedure.
Make sure you have "LOCKOUT" set to "NONE." See *Section 3 – Configuration*.

CAUTION For linear inputs, avoid step changes in inputs. Vary smoothly from initial value to final 100% value.

Procedure

The Calibration procedure for Input #1 is listed in table 7-5.

Table 7-5 Input #1 Calibration Procedure

Step	Description	Press	Action
1	Enter Calibration Mode	SET UP until you see	Upper Display: CALIB Lower Display: INPUT 1
		FUNCTION	You will see: Upper Display: DISABL Lower Display: CAL IN1
		▲	The calibration sequence is enabled and you will see: Upper Display: BEGIN Lower Display: CAL IN1 At the completion of the sequence, the selection automatically reverts to disable.
2	Calibrate 0%	FUNCTION	You will see: Upper Display: APPLY Lower Display: IN1 ZERO Adjust your calibration device to an output signal equal to the 0% range value for your particular input sensor. See Table 7-1 for Voltage or Resistance equivalents. Wait 30 seconds, then go to the next step.

Continued on next page

Table 7-5 Input #1 Calibration Procedure, continued

Step	Description	Press	Action
3	Calibrate 100 %	FUNCTION	You will see: Upper Display APPLY Lower Display IN1 SPAN Adjust your calibration device to an output signal equal to the 100% range value for your particular input sensor. See Table 7-1 for Voltage or Resistance equivalents. Wait 30 seconds, and **If...** / **Then...** you are calibrating a Thermocouple input / Go to step 4 you are calibrating other than a Thermocouple input / Go to step 5
4	Check the Cold Junction Temperature ATTENTION The accuracy of the controller is directly affected by the accuracy of this value. Change this value only if the zero and span calibration procedures did not bring the controller within the specified accuracy requirements.	FUNCTION	The calculations for zero and span are now stored and you will see: Upper Display -4 — The cold junction temperature at the rear terminals Lower Display CJTEMP The value in the upper display is in the tenths of a degree. It is the current reading of the temperature as measured at the thermocouple terminals and recognized by the controller. You can change this value, if it is in error, using the ▲ or ▼ key. ATTENTION When calibrating T/C inputs using a precision resistor, calibrate the cold junction as 77°F (25°C).
5	Exit the Calibration Mode	FUNCTION	The controller will store the calibration constants and exit calibration mode.

7.6 Input #2 Set Up Wiring

4 to 20 mA Input

Use the copper leads and connect the calibrator to the rear terminals of Input #2. See Figure 7-8.

Figure 7-8 Wiring Connections for 4 to 20 mA input – Input #2

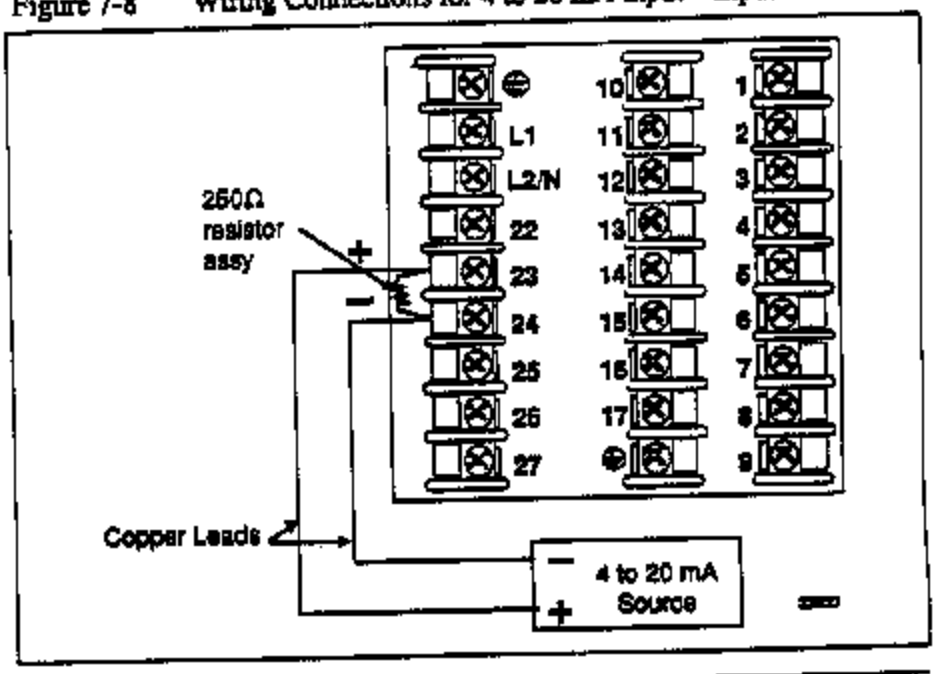

Continued on next page

1 to 5 Volt Inputs

Use the copper leads and connect the calibrator to the rear terminals of Input #2. See Figure 7-9.

Figure 7-9 Wiring Connections for 1 to 5 Volt input – Input 2

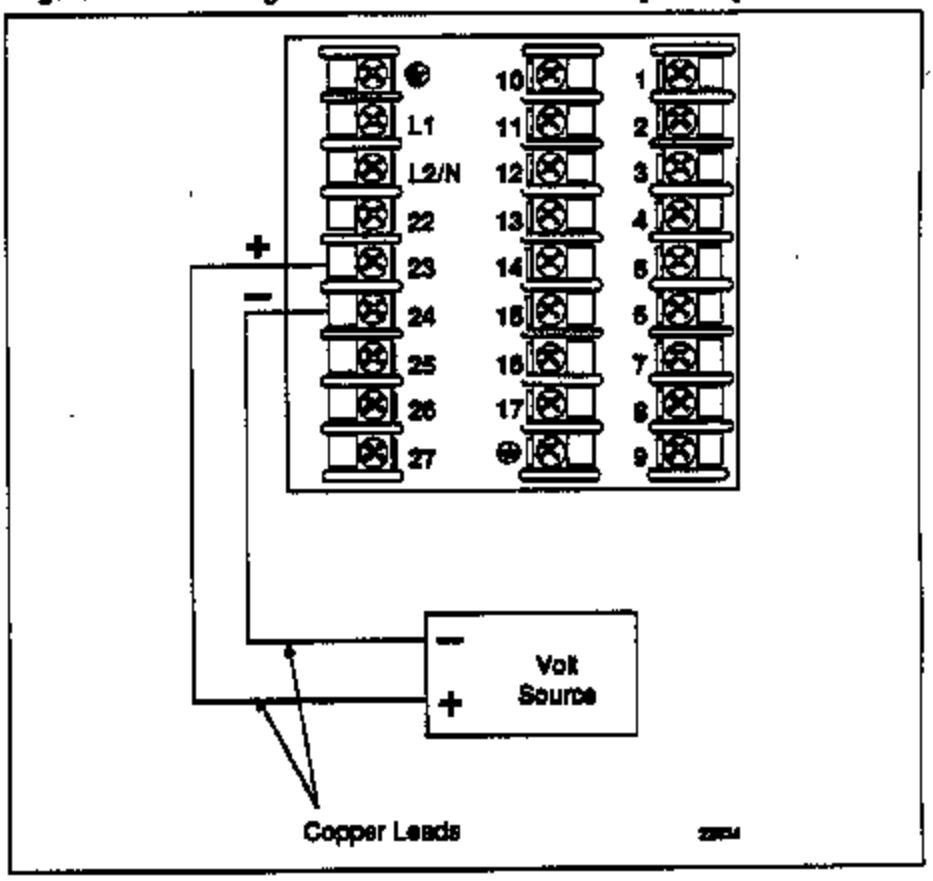

7.7 Input #2 Calibration Procedure

Introduction

Apply power and allow the controller to warm up for 15 minutes before you calibrate.
Please read "*Set Up Wiring*" before beginning the procedure.
Make sure you have "LOCKOUT" set to "NONE." See *Section 3 – Configuration*.

Procedure

The Calibration procedure for Input #2 is listed in table 7-6.

Table 7-6 Input #2 Calibration Procedure

Step	Description	Press	Action
1	Enter Calibration Mode	SET UP until you see	Upper Display: CALIB Lower Display: INPUT 2
		FUNCTION	You will see: Upper Display: DISABL Lower Display: CAL IN2
		▲	You will see: Upper Display: BEGIN Lower Display: CAL IN2
2	Calibrate 0%	FUNCTION	You will see Upper Display: APPLY Lower Display: IN2 ZERO Adjust your calibration device to an output signal equal to the 0% range value for your particular input sensor. See Table 7-1 for Voltage or Resistance equivalents. Wait 30 seconds, then go to the next step.

Continued on next page

Table 7-6 Input #2 Calibration Procedure, continued

Step	Description	Press	Action
3	Calibrate 100 %	FUNCTION	You will see Upper Display APPLY Lower Display IN2 SPAN Adjust your calibration device to an output signal equal to the 100% range value for your particular input sensor. See Table 7-1 for Voltage or Resistance equivalents. Wait 30 seconds, then go to the next step.
4	Exit the Calibration Mode	FUNCTION	The controller will store the calibration constants.
		LOWER DISPLAY or SET UP	To store the calibration constants and exit the calibration mode.

Section 8 – Output Calibration

8.1 Overview

Introduction

This section describes the field calibration procedures for the following types of outputs:

- Current Output
- Position Proportional and 3 Position Step Output
- Auxiliary Output

What's in this section

This section contains the following topics:

Topic	See Page
8.1 Overview	149
8.2 Current Proportional Output Calibration	150
• Introduction	150
• Equipment Needed	150
• How to Connect the Calibrator	150
• Calibration Procedure	151
8.3 Position Proportional and Three Position Step Output Calibration	152
• Position Proportional Control	152
• 3 Position Step Control	152
• Equipment Needed	152
• What connection to make	152
• Calibration Procedure	153
8.4 Auxiliary Output Calibration	156
• Introduction	156
• Equipment Needed	156
• How to Connect the Calibrator	156
• Calibration Procedure	157

WARNING—SHOCK HAZARD

OUTPUT CALIBRATION MAY REQUIRE ACCESS TO HAZARDOUS LIVE CIRCUITS, AND SHOULD ONLY BE PERFORMED BY QUALIFIED SERVICE PERSONNEL. MORE THAN ONE SWITCH MAY BE REQUIRED TO DE-ENERGIZE UNIT BEFORE CALIBRATION.

8.2 Current Proportional Output Calibration

Introduction

Calibrate the controller so that the output provides the proper amount of current over the desired range.
The controller can provide an output current range of from 0 to 21 milliamperes and can be calibrated at 4 mA for 0% of output and 20 mA for 100% of output or any other values between 0 and 21 mA.

Equipment needed

You will need a standard shop type milliammeter, with whatever accuracy is required, capable of measuring 0 to 20 milliamps.

Calibrator connections

Refer to Figure 8-1 and wire the controller according to the procedure given in table 8-1.

Table 8-1 Set Up Wiring Procedure Current Proportional Output

Step	Action
1	Apply power and allow the controller to warm up 15 minutes before you calibrate.
2	Tag and disconnect the field wiring, at the rear of the controller, from terminals 2(+) and 3(–). See Figure 8-1.
3	Connect a Milliammeter across these terminals.

Figure 8-1 Wiring Connections for Calibrating Current Proportional Output

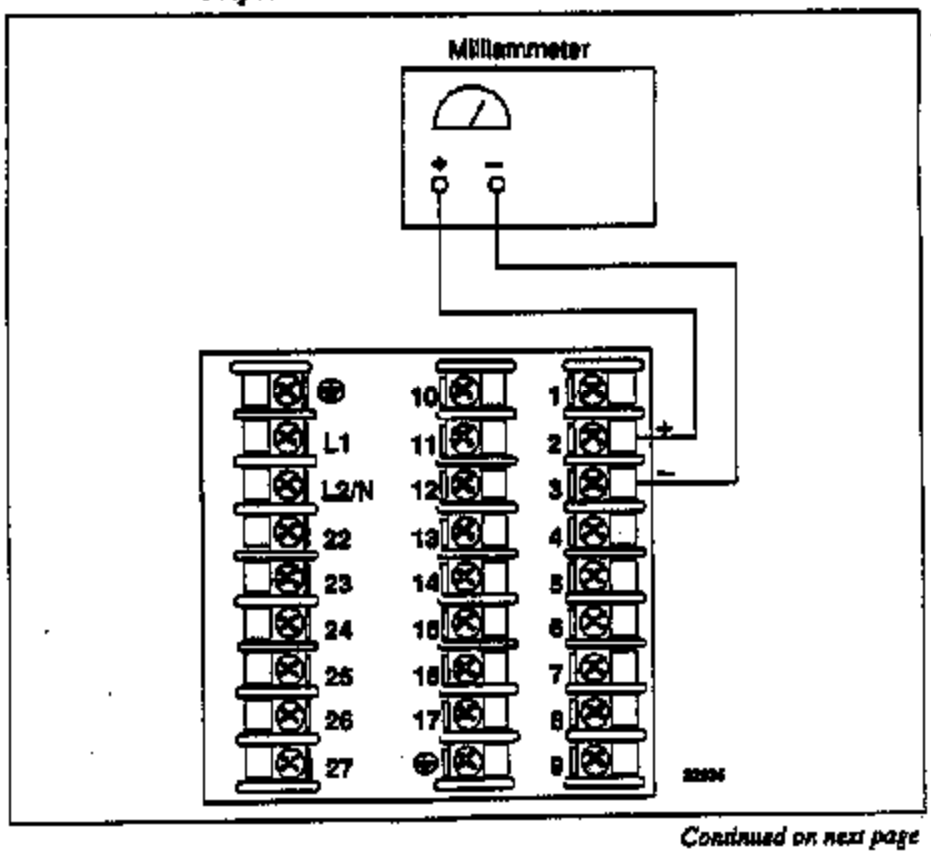

Continued on next page

Procedure

The procedure for calibrating the Current Proportional Output is listed in table 8-2. Make sure "LOCKOUT" in the Tuning Set Up group is set to "NONE." See *Section 3 – Configuration*.

Table 8-2 Current Proportional Output Calibration Procedure

Step	Description	Press	Action
1	Enter Calibration Mode	SET UP until you see	Upper Display CALIB Lower Display CURRENT
2	Calibrate 0%	FUNCTION	You will see: Upper Display a value between 1 and 2048 Lower Display ZERO VAL
		▲ or ▼	until the desired 0% output is read on the milliammeter. Use the values shown below depending on the action of your controller. 0 mA For 0 to 20 mA Direct Action* 20 mA For 0 to 20 mA Reverse Action 4 mA For 4 to 20 mA Direct Action 20 mA For 4 to 20 mA Reverse Action
3	Calibrate 100%	FUNCTION	This stores the 0%value and, You will see: Upper Display a value between 1 and 2048 Lower Display SPAN VAL
		▲ or ▼	until the desired 100% output is read on the milliammeter. Use the values shown below depending on the action of your controller. 20 mA For 0 to 20 mA Direct Action 0 mA For 0 to 20 mA Reverse Action* 20 mA For 4 to 20 mA Direct Action 4 mA For 4 to 20 mA Reverse Action
4	Exit the Calibration Mode	FUNCTION	The controller will store the span value.
		LOWER DISPLAY or SET UP	To exit the calibration mode. * When attempting to achieve 0 mA, always adjust the output to about 0.5 mA, and slowly decrease until the output just goes to zero. Further decrementing will not change the output current (since the circuit cannot produce negative current) but will affect the accuracy of the output by creating a dead zone where no current flows.

8.3 Position Proportional and Three Position Step Output Calibration

Position Proportional control	When the UDC 3000 controller has a Position Proportional control output, calibrate the controller so that the increase and decrease relays operate properly with respect to the position of the external feedback slidewire.
3 Position Step control	*Three Position Step Control Output models with Motor Position Indication* This model must have its output calibrated per the entire procedure to ensure the displayed output (slidewire position) agrees with the final control element position. *Three Position Step Control Output models without Motor Position Indication* This model only requires that the "Motor Time" be entered as shown in the calibration procedure. FULL CALIBRATION IS NOT REQUIRED.
Equipment needed	None
Connections	Apply power and allow the controller to warm up 15 minutes before you calibrate. Leave all field wiring connected to the rear terminals.
Auto mode vs Manual mode	There are two ways in which to calibrate Position Proportional or 3 Position Step control: AUTO mode or MANUAL mode.
Rules for Auto mode vs Manual mode	The Auto-mode selection must be done at least once before the manual mode will operate properly. Failure to use the Auto-mode procedure will prevent the controller from going into automatic control mode.
Displayed values	During the Auto-mode calibration procedure, the values being displayed are used only to indicate if the motor is still traveling. To view the actual calibration value, use the manual mode after the Auto-mode is completed. These values can be changed for purposes of tweaking the calibration.

Continued on next page

Procedure

The procedure for calibrating the Position Proportional output and 3 Position Step control output is listed in table 8-3.

Make sure "LOCKOUT" in Tuning Set Up group is set to "NONE." See *Section 3 – Configuration.*

For *"Three Position Step Control Output models without Motor Position Indication"*, do steps 1 and 2 only.

For *"Position Proportional Output"* and *"Three Position Step Control Output models with Motor Position Indication"* follow the entire calibration procedure.

Table 8-3 Position Proportional and 3 Position Step Output Calibration Procedure

Step	Description	Press	Action
1	Enter Calibration Mode	SET UP until you see	Upper Display CALIB Lower Display POS PROP
2	Set Motor Traverse Time Note: This is the time it takes the motor to travel from 0 to 100%.	FUNCTION	Until you see: Upper Display a value Lower Display MTR TIME
		▲ or ▼	until the proper motor stroke time is reached (see the motor specs or measure the time) Range of setting = 5 to 1800 Seconds

Continued on next page

Table 8-3 Position Proportional and 3 Position Step Output Calibration Procedure, continued

Step	Description	Press	Action
3	Select Automatic or Manual Calibration	FUNCTION	until you see: Upper Display DISABLE Lower Display POS PROP You can calibrate the controller output manually or let the controller calibrate the output automatically. If the slidewire has never been calibrated, you must use "DO AUTO" first. In the "Automatic Calibration Mode" (DO AUTO), the controller relays automatically move the motor in the proper direction. If desired, however, the motor may be manually positioned to 0% and 100% positions. Disconnect the relay wires. "DO MAN". In the "Manual Calibration Mode" (DO MAN) the motor does not move. Instead, the existing 0% and 100% values may be changed with the ▲ or ▼ keys.
		▲ or ▼	to select automatic or manual calibration. Upper Display ◄ — DO AUTO or DO MAN Lower Display POS PROP If you select DO AUTO, go to step 4 If you select DO MAN, go to step 6 Note: When calibration is terminated, this selection reverts to DISABL.
4	DO AUTO Set 0% value	FUNCTION	The decrement relay is turned on to move the motor to 0% position. Upper Display ◄ — counts of feedback slidewire (0 to 3000) Lower Display ZERO VAL When the motor stops, the display should stop counting, then, go on to the next step.
5	Set 100% value	FUNCTION	The increment relay is turned on to move the motor to 100% position. Upper Display ◄ — counts of feedback slidewire (0 to 3000) Lower Display SPAN VAL When the motor stops, the display should stop counting, then, go on to step 6.

Continued on next page

Table 8-3 Position Proportional and 3 Position Step Output Calibration Procedure, continued

Step	Description	Press	Action
6	DO MAN Set 0% value	FUNCTION	You will see: Upper Display [ ] ← The existing zero calibration value in counts. Lower Display [ZERO VAL]
		▲ or ▼	until the desired zero value is reached in the upper display. Upper Display [ ] ← The desired zero value Lower Display [ZERO VAL]
7	Set 100% value	FUNCTION	The controller will store the 0% value and you will see: Upper Display [ ] ← The existing span calibration value in counts Lower Display [SPAN VAL]
		▲ or ▼	until the desired span value is reached in the upper display. Upper Display [ ] ← The desired span value Lower Display [SPAN VAL] For manual calibration, the motor does not move from its position prior to the start of Position Proportional calibration.
8	Exit the Calibration Mode	FUNCTION	The controller will store the 100% value.
		LOWER DISPLAY or SET UP	To exit the calibration mode.

8.4 Auxiliary Output Calibration

Introduction

Calibrate the controller so that the Auxiliary output provides the proper amount of current over the desired range.
The controller can provide an auxiliary output current range of from 0 to 21 milliamperes and can be calibrated at 4 mA for 0% of output and 20 mA for 100% of output or any other values between 0 and 21 mA.

Equipment needed

You will need a standard shop type milliammeter with whatever accuracy is required, capable of measuring 0 to 20 milliamps.

Calibrator connections

Refer to Figure 8-2 and wire the controller according to the procedure given in table 8-4

Table 8-4 Set Up Wiring Procedure for Auxiliary Output

Step	Action
1	Apply power and allow the controller to warm up 15 minutes before you calibrate.
2	Tag and disconnect the field wiring, at the rear of the controller, from terminals 16 (+) and 17 (–). See figure 8-2.
3	Connect a Milliammeter across these terminals.

Figure 8-2 Wiring Connections for Calibrating Auxiliary Output

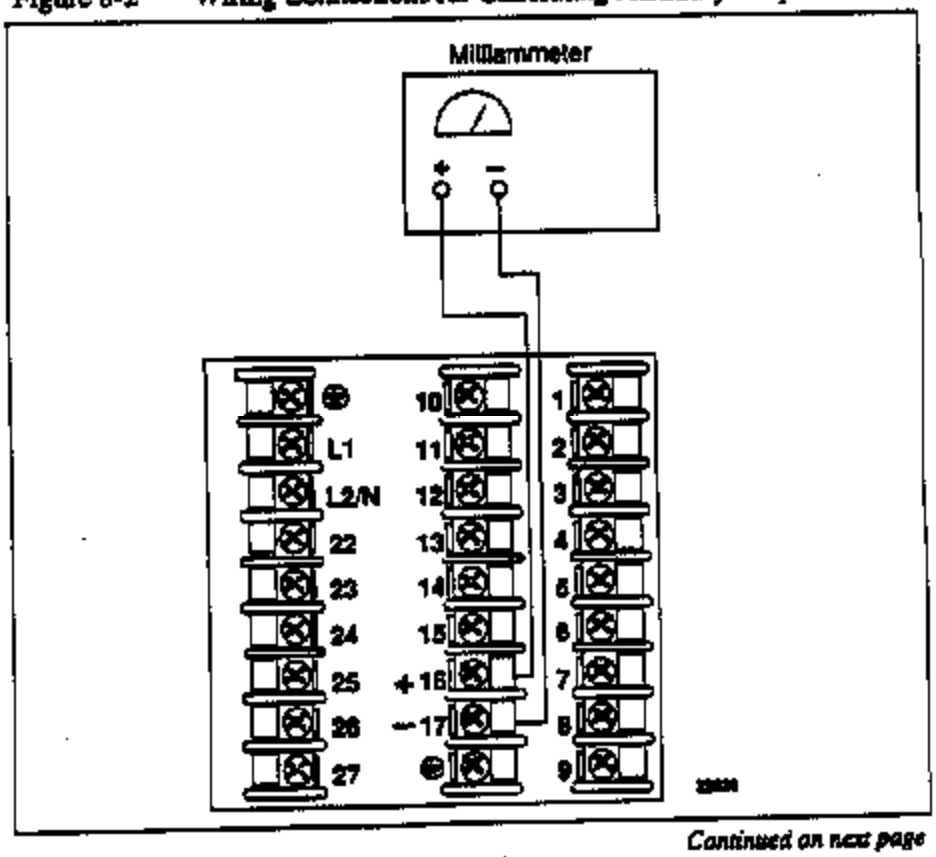

Continued on next page

Procedure

The procedure for calibrating the Auxiliary Output is listed in Table 8-5. Make sure "LOCKOUT" in the Tuning Set Up group is set to "NONE." See *Section 3 – Configuration.*

Table 8-5 Auxiliary Output Calibration Procedure

Step	Description	Press	Action
1	Enter Calibration Mode	SET UP until you see	Upper Display CALIB Lower Display AUX OUT
2	Calibrate 0%	FUNCTION	You will see: Upper Display a value Lower Display ZERO VAL
		▲ or ▼	until the desired 0% output is read on the milliammeter. Use the values shown below depending on the action of your controller. 0 mA For 0 to 20 mA Direct Action * 20 mA For 0 to 20 mA Reverse Action 4 mA For 4 to 20 mA Direct Action 20 mA For 4 to 20 mA Reverse Action
3	Calibrate 100%	FUNCTION	This stores the 0%value and, you will see: Upper Display a value Lower Display SPAN VAL
		▲ or ▼	until the desired 100% output is read on the milliammeter. Use the values shown below depending on the action of your controller. 20 mA For 0 to 20 mA Direct Action 0 mA For 0 to 20 mA Reverse Action* 20 mA For 4 to 20 mA Direct Action 4 mA For 4 to 20 mA Reverse Action
4	Exit the Calibration Mode	FUNCTION	The controller will store the span value.
		LOWER DISPLAY or SET UP	To exit the calibration mode. * When attempting to achieve 0 mA, always adjust the output to about 0.5 mA, and slowly decrease until the output just goes to zero. Further decrementing will not change the output current (since the circuit cannot produce negative current) but will affect the accuracy of the output by creating a dead zone where no current flows.

Section 9 – Troubleshooting / Service

9.1 Overview

Introduction

Instrument performance can be adversely affected by installation and application problems as well as hardware problems. We recommend that you investigate the problems in the following order;

- Installation related problems
- Application related problems
- Hardware and software related problems

and use the information presented in this section to solve them.
If a replacement of any part is required, follow the procedures listed under "Parts Replacement Procedures".

What's in this section?

The following topics are covered in this section.

	Topic	See Page
9.1	Overview	159
9.2	Troubleshooting Aids	161
	• Overall Error Messages	161
	• Controller Failure Symptoms	162
	• Customer Support	162
	• Determining the Software Version Number	162
9.3	Power-up Tests	163
9.4	Status Tests	164
9.5	Background Tests	166
9.6	Controller Failure Symptoms	168
9.7	Troubleshooting Procedures	169
	• Power Failure	169
	• Current Proportional Output Failure	170
	• Position Proportional Output Failure	171
	• Time Proportional Output Failure	172
	• Time/Current - Current/Time Proportional Output Failure	173
	• Alarm Relay Output Failure	174
	• Keyboard Failure	175
	• Communications Failure	176
9.8	Parts Replacement Procedures	177
	• How to remove the chassis	178
	• How to replace the display/keyboard assembly	179
	• How to remove printed wiring boards from the chassis	180
	• Printed wiring board identification	181
	• 2nd input board replacement procedure	182
	• Power input board replacement procedure	183
	• Digital input board replacement procedure	184
	• Aux.Out/Comm. board replacement procedure	185
	• MCU/output board replacement procedure	186
9.9	Maintenance	187

Continued on next page

Installation related problems

Read the Installation section in this manual to make sure the UDC 3000 has been properly installed. The installation section provides information on protection against electrical noise, connecting external equipment to the controller, and shielding and routing external wiring.

ATTENTION System noise induced into the controller will result in diagnostic error messages recurring. If the diagnostic error messages can be cleared, it indicates a "soft" failure and is probably noise related.
If system noise is suspected, completely isolate the controller from all field wiring. Use calibration sources to simulate PV and check all controller functions; i.e. Gain, Rate, Reset, Output, Alarms, etc.

Application related problems

Review the application of the controller; then, if necessary, direct your questions to the local sales office.

Hardware and software related problems

Use the troubleshooting error message prompts and controller failure symptoms to identify typical failures which may occur in the controller. Follow the troubleshooting procedures to correct them.

9.2 Troubleshooting Aids

Overall error messages

An error message can occur

- at power-up,
- during continuous background tests while in normal operation,
- when the Status Tests are requested.

Table 9-1 lists all the error message prompts that you could see, the reason for the failure, and under what test group the prompt could appear. Refer to Tables 9-3 (Power-up), 9-5 (Status), and 9-6 (Background) for the particular test group indicated.

Table 9-1 Error Message Prompts

Error Message (lower display)	Reason for Failure	Test Group	Refer to Table
CAL TEST	Calibration test failure	Power-up or Status	9-3 9-5
CONF ERR	Low limit greater than high limit for PV, SP, Reset, or Output	Background	9-6
CONFTEST	Configuration test failure	Power-up or Status	9-3 9-5
E E FAIL	Unable to write to non-volatile memory	Background	9-6
FACT CRC	Factory Calibration Cyclic Redundancy test	Status	9-5
FAILSAFE	Controller in Failsafe	Power-up, Background, or Status	9-3 9-5 9-6
INP1FAIL	Two consecutive failures of Input 1 Integration	Background	9-6
INP2FAIL	Two consecutive failures of Input 2 Integration	Background	9-6
INP1 RNG	Input 1 Out of Range	Background	9-6
INP2 RNG	Input 2 Out of Range	Background	9-6
PV LIMIT	PV Out of Range	Background	9-6
RAM TEST	RAM test failed	Power-up or Status	9-3 9-5
RV LIMIT	Remote Variable Out of Range	Background	9-6
SW FAIL	Position Proportional slidewire input failure	Background	9-6
CAL MTR	Position Proportional or 3 Position Step control with motor position indication, Auto Cal never performed.	Power-up and Background	9-3

Continued on next page

Controller failure symptoms

Other failures may occur that deal with the Power, Output, or Alarms. Refer to the controller failure symptom in Table 9-7 to determine what is wrong and the troubleshooting procedures to use to correct the problem.

Check installation

If a set of symptoms still persists, refer to *Section 2 - Installation* and ensure proper installation and proper use of the controller in the system.

Customer support

If you cannot solve the problem using the troubleshooting procedures listed in this section; or get the model number and serial number from the label on the chassis molding, and software version (see Table 9-2) then:

call Customer Support Phone Number
1-800-423-9883 USA
1-800-461-0013 Canada.

If it is determined that a hardware problem exists and the controller is still within the two year warranty, a replacement controller will be shipped with instructions for returning the defective unit.

Determining the software version

Table 9-2 lists the procedure for identifying the software version number.

Table 9-2 Procedure for Identifying the Software Version

Step	Operation	Press	Action
1	Select STATUS Set Up Group	SET UP	Until you see: Upper Display READ Lower Display STATUS
2	Read the software version	FUNCTION	Until you see: Upper Display 33 13 ← Software version Number Lower Display VERSION Please give this number to the Customer Support person. It will indicate which version of UDC 3000 you have and help them determine a solution to your problem.

9.3 Power-up Tests

What happens at power-up

When the controller is powered-up, three tests are run by the UDC 3000 software to ensure memory integrity.
As the tests are run, the displays will appear as shown in Table 9-3.

Table 9-3 Power-up Tests

Lower Display	Upper Display
RAM TEST	PASSED or FAILED
CONFTEST	PASSED or FAILED
CAL TEST	PASSED or FAILED

Test failures

If any of these three tests fail, "FAILED" will appear momentarily in the upper display, then a display test is run, after which the controller will go into manual mode and you will see:

Upper Display
[ ] ← PV value

Lower Display
[FAILSAFE] (blinking)

Refer to "*Status Tests*" to determine which tests have failed and how to correct them.

Position proportional or 3 position step test failures

For controller configured for Position Proportional or 3 Position step control with motor position indication and Auto-cal has never been done, a prompt "CAL MTR" will appear suggesting that the controller be calibrated.

9.4 Status Tests

Introduction

When required, the results of these tests can be checked to determine the reason the controller has gone to "Failsafe".

How to check the status tests

The procedure in Table 9-4 tells you how to display the results of the status tests. Table 9-5 lists the tests, the reason for the failure, and how to correct the problem.

Table 9-4 Procedure for Displaying the Status Tests Results

Step	Operation	Press	Action
1	Select STATUS Set Up Group	[SET UP]	Until you see: Upper Display READ Lower Display STATUS
2	Read the status tests results	[FUNCTION]	Until you see: Upper Display NO or YES — YES indicates a failure Lower Display FAILSAFE Successive presses of the [FUNCTION] key will display the results of the status tests in the following order: RAM TEST CONF TEST CAL TEST FACT CRC Identify the problem and correct the failure as shown in Table 9-5.

Continued on next page

Program Record Sheet Draw your ramp/soak profile on the record sheet shown in Figure 6-2 and fill in the associated information in the blocks provided. This will give you a permanent record of your program and will assist you when entering the Setpoint data.

Figure 6-2 Program Record Sheet

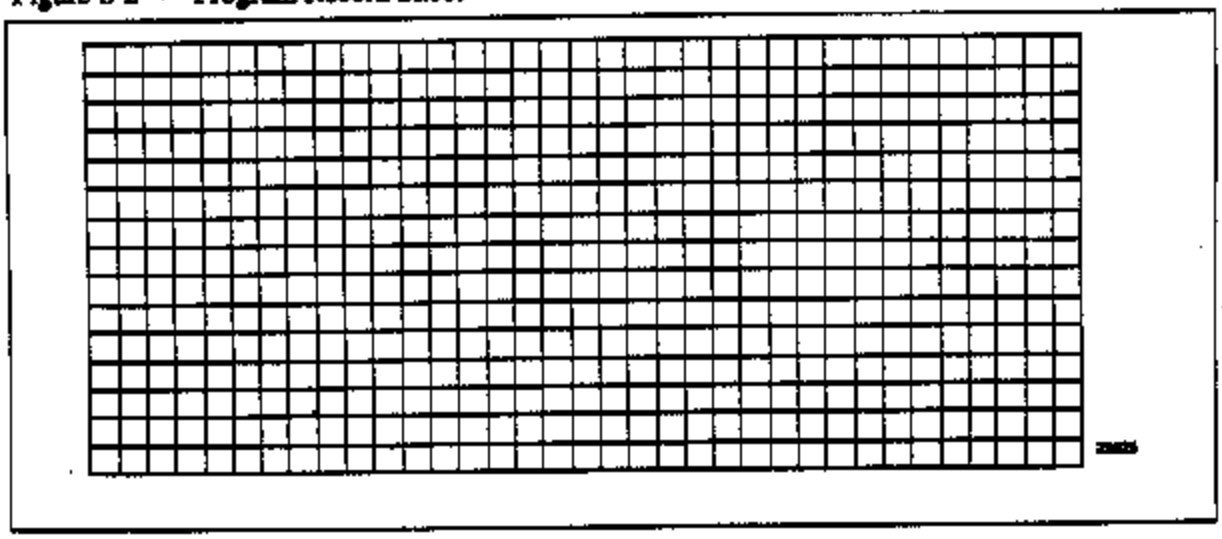

Prompt	Function	Segment	Value		Prompt	Function	Segment	Value
STRT SEG	Start Seg.				SEG7RAMP	Ramp Time	7	
END SEG	End Seg.				SEG8 SP	Soak SP	8	
RECYCLES	Number of Recycles				SEG8TIME	Soak Time	8	
SOAK DEV	Deviation Value				SEG9RAMP	Ramp Time	9	
SEG1RAMP	Ramp Time	1			SG10 SP	Soak SP	10	
SEG2 SP	Soak SP	2			SG10 TIME	Soak Time	10	
SEG2TIME	Soak Time	2			SG11RAMP	Ramp Time	11	
SEG3RAMP	Ramp Time	3			SG12 SP	Soak SP	12	
SEG4 SP	Soak SP	4			SG12TIME	Soak Time	12	
SEG4TIME	Soak Time	4			STATE	Program Controller State		Hold
SEG5RAMP	Ramp Time	5			PROG END	Controller Status		Last SP
SEG6 SP	Soak SP	6			RAMP UNIT	Engr. Unit for Ramp		Time
SEG6TIME	Soak Time	6						

6.4 Entering the Setpoint Program Data

Introduction

The procedure listed in table 6-1 tells you what keys to press and what prompts you will see when entering the setpoint program data. Follow the prompt hierarchy listed in table 6-2 when selecting the functions for setpoint programming.

ATTENTION Make sure SP RAMP and SP RATE are disabled first.

Table 6-1 Setpoint Program Data Entry Procedure

Step	Action	Press	Result
1	Select SP PROG Group	SET UP until you see	Upper Display: SET UP Lower Display: SP PROG
2	Select the functions	FUNCTION	This accesses the function prompts and enables Setpoint Programming. Upper Display: The current value for each prompt is shown Lower Display: The individual function prompts within the setpoint program group are shown. Successive presses of the [FUNCTION] key will sequentially display all the functions and their values or selections. Follow the prompt hierarchy shown in table 6-2.
3	Change the value or selection of a function prompt	▲ or ▼	This changes the value or selection in the upper display. If the display blinks, you are trying to select an unacceptable value.
4	Enter Value or selection into memory	FUNCTION	This enters the value or selection and goes to another prompt. Repeat steps 3 and 4 for each function you want to change.
5	Exit configuration	LOWER DISPLAY	This exits from the configuration mode.

Alarms on the Setpoint Program

You can configure an event to go ON or OFF at the beginning or end of any segment. Refer to *Section 3 - Configuration* under *"Alarms Parameters Group"* for details.

Continued on next page

Status Tests

Table 9-5 lists the Status tests, the reason for their failure, and how to correct the failure.

Table 9-5 Status Tests

Test (Lower Display)	Definition	Upper Display	Reason for Failure	How to Correct the Failure
FAILSAFE	Failsafe Fault	NO	No Failure	
		YES	Burnout configured for none and input fails. –RAM TEST failed –CONFTEST failed –CALTEST failed	1. Step through the rest of the STATUS check to identify the particular failure. Also see Table 9-6, Background tests
RAM TEST	RAM test run at power-up	PASS	No Failure	RAM test passed.
		FAIL	RAM Failure	1. Power cycle to see if the error clears.
CONF TEST	Configuration Checksum	PASS	No Failure	Configuration checksum passed.
		FAIL	Configuration data is in error.	1. Step through STATUS tests – the controller will recalculate the checksum. 2. Check all configuration prompts for accuracy. See *Section 3 - Configuration*
CAL TEST	Working Calibration	PASS	No Failure	Working calibration checksum passed.
		FAIL	The working calibration constants in the controller are in error.	1. If the controller has not been field calibrated, see *Section 3 - Configuration* and change the input to a different type. Enter it, loop through the status tests, then return the input type to the original one. 2. If the controller has been field calibrated, recalibrate the controller.
FACT CRC	Factory calibration test	PASS	No Failure	Factory calibration cyclic redundancy test passed
		FAIL	Factory set input constants have been changed due to the change in input type.	1. Cycle through Status to clear the error. 2. Check the calibration. Make sure 0 and 100% are correct values. 3. Recalibrate if step 1 is unsatisfactory. Refer to *Section 7 - Input Calibration*.

9.5 Background Tests

Introduction

The UDC 3000 performs on-going background tests to verify data and memory integrity. If there is a malfunction, an error message will be displayed (blinking) in the lower display.

Background Tests

In the case of more than one simultaneous malfunction, only the one with the highest priority will appear in the lower display. Table 9-6 lists these background tests, the reason for their failure, and how to correct the problem.

Table 9-6 Background Tests

Lower Display	Reason for Failure	How to Correct the Problem
EE FAIL	Unable to write to non-volatile memory. Anytime you change a parameter and it is not accepted, you will see EE FAIL.	1. Check the accuracy of the parameter and re-enter. 2. Try to change something in configuration. 3. Run through STATUS tests to re-write to EEPROM.
FAILSAFE	This error message shows whenever the controller goes into a failsafe mode of operation. This will happen if: • RAM test failed • Configuration test failed • Calibration test failed • Burnout configured for none and the input failed.	1. Run through STATUS check to determine the reason for the failure. 2. Press the SET UP key until STATUS appears in the lower display. 3. Press the FUNCTION key to see what tests pass or fail, then run through the STATUS codes a second time to see if the error cleared. Correct according to the recommendations given in Table 9-5.
INP1FAIL	Two consecutive failures of input 1 integration, i.e., cannot make analog to digital conversion. This will happen if: • Upscale or Downscale burnout is selected • Input not configured correctly	1. Make sure the actuation is configured correctly. See *Section 3 - Configuration.* 2. Make sure the input is correct. 3. Check for gross over-ranging. 4. Replace the cold junction assembly.
INP2FAIL	Two consecutive failures of input 2 integration, i.e., cannot make analog to digital conversion.	1. Make sure the actuation is configured correctly. See *Section 3 - Configuration.* 2. Make sure the input is correct. 3. Check for gross over-ranging.
SW FAIL	Position Proportional input slidewire failure	1. Check motor slidewire connections. 2. Recalibrate the slidewire motor position, see the calibration section.
CAL MTR	Position Proportional or 3 Position Step Control with Motor Position Indication, Auto Cal never performed.	1. Calibrate the controller for Position Proportional output. Refer to *Subsection 8.3 – Position Proportional and 3 Position Step Output Calibration.*
CONF ERR	• PV low limit is > PV high limit • SP low limit is > SP high limit • Output low limit > Output high limit	1. Check the configuration for each item and reconfigure if necessary.

Table continued on next page

Table 9-6 Background Tests, continued

Lower Display	Reason for Failure	How to Correct the Problem
INP1 RNG	Input 1 out of range. The process input is outside the range limits. If you have a linear input and the range goes outside the range limits, the controller will switch to the configured Failsafe output value.	1. Make sure the range and actuation are configured properly. 2. Check the input source. 3. Restore the factory calibration: a. Disconnect the wiring from and place a jumper across terminals 26 and 27. The controller should read room temperature if it is configured for a thermocouple input. b. If it does not read room temperature, see *Section 3-Configuration* and change the IN1TYP prompt in the INPUT 1 group to another type of thermocouple. c. After the change, press FUNCTION key, then the LOWER DISPLAY key. The controller should read the correct room temperature. If it does not, the unit has an input failure. d. Repeat step b. This time switch the IN1TYP back to the originally selected thermocouple. e. Repeat step c. The controller is restored with factory calibration. f. Remove the jumper and reconnect the thermocouple. 4. Field calibrate. See *Section 7 - Input Calibration.*
INP2 RNG	Input 2 out of range. The remote input is outside the range limits.	1. Make sure the range and actuation are configured properly. 2. Check the input source. 3. Field calibrate. See *Section 7 - Input Calibration.*
PV LIMIT	PV out of range. PV = INP1 + INP1 BIAS	1. Make sure the input signal is correct. 2. Make sure the Bias setting is correct 3. Recheck the calibration. Use Bias of 0.0
RV LIMIT	The result of the formula shown below is beyond the range of the remote variable. RV = INP2 X RATIO + BIAS	1. Make sure the input signal is correct. 2. Make sure the Ratio and Bias settings are correct. 3. Recheck the calibration. Use a Ratio of 1.0 and a Bias of 0.0.

9.6 Controller Failure Symptoms

Introduction

In addition to the error message prompts, there are failure symptoms that can be identified by noting how the controller displays and indicators are reacting.

Symptoms

Compare your symptoms with those shown in Table 9-7 and refer to the troubleshooting procedure indicated to correct the problem.

Table 9-7 Controller Failure Symptoms

Upper Display	Lower Display	Indicators	Controller Output	Probable Cause	Trouble-shooting Procedure
Blank	Blank	Off	None	Power Failure	1
OK	Displayed Output disagrees with Controller Output	OK	Controller Output disagrees with Displayed Output	Current Proportional Output	2
OK		OK		Position Proportional Output	3
OK		OK		Time Proportional Output	4
OK		OK		Current/Time Proportional Output	5
OK	OK	OK	External Alarm function does not operate properly	Malfunction in alarm output	6
Display does not function when a key is pressed				Keyboard Malfunction	7
Controller fails to go into "Slave" operation during communications				Communications Failure	8

Other symptoms

If a set of symptoms or prompts other than the one you started with appears while troubleshooting, re-evaluate the symptoms. This may lead to a different troubleshooting procedure.
If the symptom still persists, refer to the installation section in this manual to ensure proper installation and proper use of the controller in your system.

9.7 Troubleshooting Procedures

Introduction

The troubleshooting procedures are listed in numerical order as they appear in Table 9-7. Each procedure lists what to do if you have that particular failure and how to do it or where to find the data needed to accomplish the task.

WARNING—SHOCK HAZARD

TROUBLESHOOTING MAY REQUIRE ACCESS TO HAZARDOUS LIVE CIRCUITS, AND SHOULD ONLY BE PERFORMED BY QUALIFIED SERVICE PERSONNEL. MORE THAN ONE SWITCH MAY BE REQUIRED TO DE-ENERGIZE UNIT BEFORE SERVICING.

Equipment needed

You will need the following equipment in order to troubleshoot the symptoms listed in the tables that follow:

- DC Milliammeter – mAdc
- Calibration sources – T/C, mV, Volt, etc.
- Voltmeter

Procedure #1

Table 9-8 explains how to troubleshoot power failure symptoms.

Table 9-8 Troubleshooting Power Failure Symptoms

Step	What to do	How to do it
1	Check the AC line voltage.	Use a Voltmeter to measure the AC voltage across terminals L1 and L2 on the rear terminal panel of the controller. Check the earth ground connection.
2	Make sure the chassis plugs into the rear of the case properly.	Withdraw the chassis and visually inspect the controller board and the inside of the case.
3	Check the system for Brown-outs, heavy load switching, etc.; and conformance to installation instructions.	Refer to *Section 2 - Installation.*
4	Change PS/Input board.	Refer to Table 9-20.
5	Change MCU/Output board.	Refer to Table 9-23.

Continued on next page

Procedure #2

Table 9-9 explains how to troubleshoot Current Proportional Output failure symptoms.

Table 9-9 Troubleshooting Current Proportional Output Failure

Step	What to do	How to do it
1	Make sure the controller is configured for Current output.	Make Set Up group prompt "ALGORTHM". Function prompt "OUT ALG" = selection "CURRNT" Refer to *Section 3 - Configuration.*
2	Check the field wiring.	Output impedance must be less than or equal to 1000 Ohms.
3	Make sure all the configurable tuning constants, limits, and configuration data stored in the controller are correct. Reconfigure, if necessary.	Refer to *Section 3 - Configuration* to check all this data and how to reconfigure.
4	Check the output.	Put the controller into Manual mode and change the output from 0 to 100% (4-20 mA). Use a DC milliammeter at the rear terminals to verify the output.
5	Recalibrate the Current Proportional Output.	Refer to *Section 8 - Output Calibration* for details.
6	Change MCU/Output board.	Refer to Table 9-23.

Continued on next page

Procedure #3

Table 9-10 explains how to troubleshoot Position Proportional Output failure symptoms.

Table 9-10 Troubleshooting Position Proportional Output Failure

Step	What to do	How to do it
1	Make sure the controller is configured for Position Proportional output.	Make Set Up group prompt "ALGORTHM". Function prompt "OUT ALG" = selection "POSITN" Refer to *Section 3 - Configuration.*
2	Check the field wiring.	Refer to *Section 2 - Installation* for Position Proportional Wiring information.
3	Check the output.	Put the controller into Manual mode and change the output from 0 to 100%.
4	Check whether the motor drives in both directions. If it does go to step 6.	See the Position Proportional calibration procedure in the Calibration Section for motor slidewire calibration.
5	Check whether the motor drives in either direction. If the motor drives in one direction, check the slidewire. If the motor does not drive in either direction, check the motor.	Refer to the Motor Instructions.
6	Check the output voltage to the slidewire.	Should equal from 1.3 to 1.0 volts. See wiring in the Installation section for terminal designations. The feedback slidewire output voltage must vary with the valve position.
7	Make sure the output relays are actuating properly.	Put the controller into Manual mode. Vary the output above and below the present value.Observe "OUT" indicator on the operator interface. If they are not working properly, check the field wiring, then go to step 5. If they are, go to step 8.
8	Recalibrate the controller.	Refer to Section 8 - *Output Calibration.*
9	Change MCU/Output board.	Refer to Table 9-23.

Continued on next page

Procedure #4

Table 9-11 explains how to troubleshoot Time Proportional Output failure.

Table 9-11 Troubleshooting Time Proportional Output Failure

Step	What to do	How to do it
1	Make sure the controller is configured for Time Proportional output.	Make Set Up group prompt "ALGORTHM". Function prompt "OUT ALG" = selection "TIME" or "TIME D" Refer to *Section 3 - Configuration.*
2	Check the field wiring.	Make sure the NO or NC contact wiring is correct at the rear terminals. Refer to *Section 2 - Installation* for details.
3	Make sure all the configurable tuning constants, limits, and configuration data stored in the controller are correct. Reconfigure, if necessary.	Refer to *Section 3- Configuration* to check all this data and how to reconfigure.
4	Check the output.	Put the controller into Manual mode. Vary the output above and below the present value. Observe "OUT" indicator on the operator interface.
5	Change MCU/Output board.	Refer to Table 9-23.

Continued on next page

Procedure #5

Table 9-12 explains how to troubleshoot Current/Time or Time/Current Proportional Output failure.

Table 9-12 Troubleshooting Time/Current or Current/Time Proportional Output Failure

Step	What to do	How to do it
1	Make sure the controller is configured for Time/Current or Current/Time Proportional output.	Make Set Up group prompt "ALGORTHM". Function prompt "OUT ALG" = selection "TI CUR" or "CUR TI" Refer to *Section 3 - Configuration.*
2	Check the field wiring.	Make sure the NO or NC contact wiring is correct at the rear terminals. Refer to *Section 2 - Installation* for details.
3	Make sure all the configurable tuning constants, limits, and configuration data stored in the controller are correct. Reconfigure, if necessary.	Refer to *Section 3 - Configuration* to check all this data and how to reconfigure.
4	Check the relay output.	Put the controller into Manual mode. Vary the output above and below the present value. Observe "OUT" indicator on the operator interface.
5	Check the Current Proportional Output.	Put the controller into Manual mode and change the output from 0 to 100% (4-20 mA). Use a DC milliammeter at the rear terminals to verify the output.
6	Recalibrate the controller.	Refer to *Section 8 - Output Calibration* for details.
7	Change MCU/Output board.	Refer to Table 9-23.

Continued on next page

Procedure #6

Table 9-13 explains how to troubleshoot Alarm Relay Output failure.

Table 9-13 Troubleshooting Alarm Relay Output Failure

Step	What to do	How to do it
1	Check the alarm configuration data. If it is correct, check the field wiring.	Reconfigure if necessary. Refer to *Section 3 - Configuration* for details.
2	Check that the applicable alarm relay actuates properly depending on what you have set at prompt "ALARM TYPE". If it does, check the field wiring.	If the alarm type is set for PV, place the controller in manual mode. Vary the input to raise and lower the PV around the setpoint. Listen for a click from the relay as the PV moves in either direction and note that the proper ALM1 or ALM2 is lit. If the alarm is set for output, put the controller into manual mode. Raise or lower the output above or below the value you have set as the alarm setpoint.
3	Check the field wiring.	Make sure the NO or NC contact wiring is correct on the alarm output terminals. Refer to *Section 2 - Installation* for details.
4	Change MCU/Output board.	Refer to Table 9-23.

Continued on next page

Procedure #7

Table 9-14 explains how to troubleshoot a Keyboard failure.

Table 9-14 Troubleshooting a Keyboard Failure

Step	What to do	How to do it
1	Make sure the keyboard is connected properly to the MCU/output and power/input boards.	Withdraw the chassis from the case and visually inspect the connection.
2	Controller Keyboard or specific keys may be "LOCKED OUT" via the security code.	Use your 4 digit security code number to change the lockout level. Refer to *Section 3 – Configuration*. ATTENTION Using "1000" as a security code number will override the 4-digit code previously entered.
3	Run the keyboard test.	Press the [SET UP] key and hold in, then press the [FUNCTION] key at the same time. The controller will run a display test. Then you will see: Upper Display: KEYS Lower Display: TRY ALL Press each key. If it works, the key name will appear in the lower display.
4	Replace the display/keyboard if any keys are shorted out.	Refer to *"Parts Replacement Procedures"* in this section.

Continued on next page

Procedure #6

Table 9-15 explains how to troubleshoot a Communications failure.

Table 9-15 Troubleshooting a Communications Failure

Step	What to do	How to do it
1	Check the field wiring and termination resistor.	Refer to the RS422/485 Manual or the Gateway Manual depending on the protocol used.
2	Make sure the Communications Printed Wiring Board is installed properly in the controller.	Withdraw the chassis from the case and inspect the board. See the exploded view (Figure 10-1) for location of the board. Return the chassis to the case.
3	Determine if the Communications board is faulty by running a LOCAL LOOPBACK TEST. If the test fails, replace the board.	Run the Local Loopback Test. Press [SET UP] until you see: Upper Display: SET UP Lower Display: COM Press [FUNCTION] until you see: Upper Display: DISABL Lower Display: LOOPBACK Press ▲ or ▼, you will see: Upper Display: Enable Lower Display: LOOPBACK The test will run until the operator disables it here.

9.8 Parts Replacement Procedures

Introduction

These procedures tell you how to access and replace the following printed wiring boards in your controller.

- Display/Keyboard
- MCU/Output
- Power/Input
- 2nd Input
- Digital Input
- Auxiliary Output
- DMCS Communications
- RS422/485 Communications

Equipment needed

To accomplish the procedures that follow, you will need the following equipment:

- Phillips Head Screwdriver
- Flat Bladed Screwdriver
- Small Pliers

Continued on next page

How to remove the chassis

Refer to Figure 9-1 for steps and follow the procedure listed in Table 9-16.

Table 9-16 How to Remove the Chassis

Step	Action
1	Loosen the screw on the front face.
2	Insert a flat-bladed screwdriver into the hole on the top of the case as shown in Figure 9-1 and pry chassis forward slightly until the chassis connectors separate from the back of the case.
3	Grasp the bezel and pull the chassis out of the case.

Figure 9-1 Chassis Removal

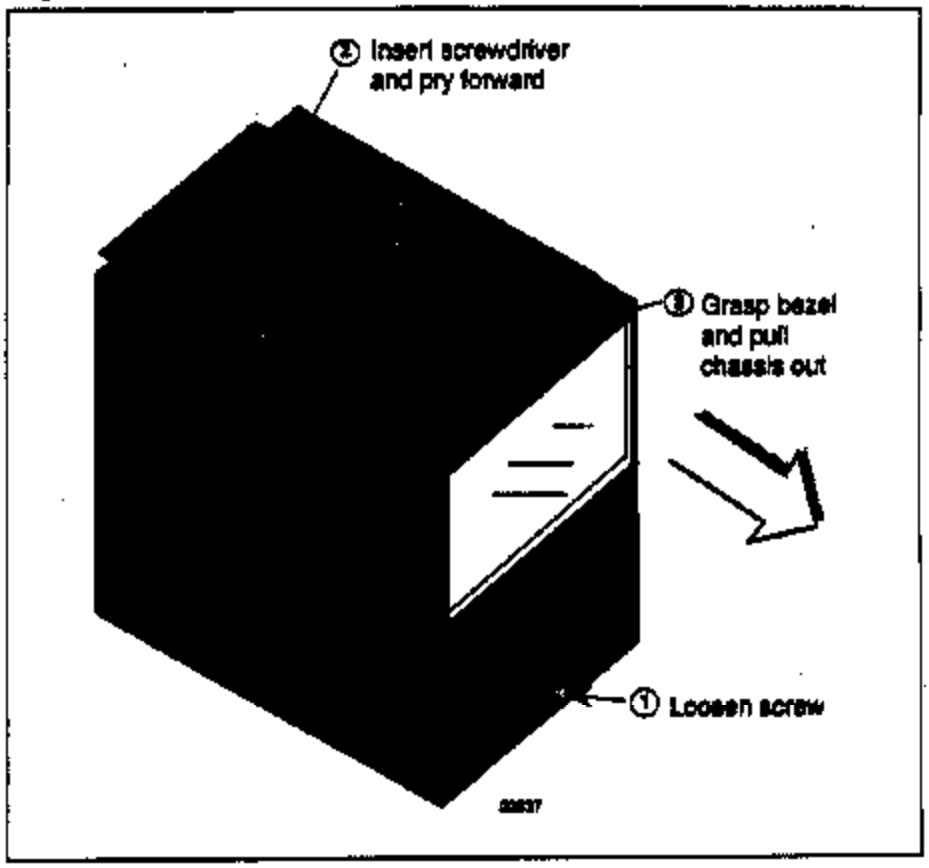

Continued on next page

How to replace the display/keyboard assembly

Refer to Figure 9-2 and follow the procedure listed in Table 9-17.

Table 9-17 Display/Keyboard Assembly Replacement Procedure

Step	Action
1	Remove the chassis from the case as shown in Figure 9-1.
2	Peel the rubber bezel and display window off the chassis assembly.
3	Separate the chassis frame at the four release points shown in Figure 9-2 and wiggle each printed wiring board out of its socket on the display/keyboard assembly. Pull out slightly.
4	Insert a small flat-bladed screwdriver into each of the display/keyboard release points (Figure 9-2) and pry out the board.
5	Install the new board, bottom end in first, and push in the top until it clicks into place.
6	Reinstall the printed wiring boards into the rear of the display board making sure that the boards click into their release points.
7	Replace the bezel and window assembly.
8	Reinstall chassis into case. Press in hard, then tighten the screw.

Figure 9-2 Display/Keyboard Replacement

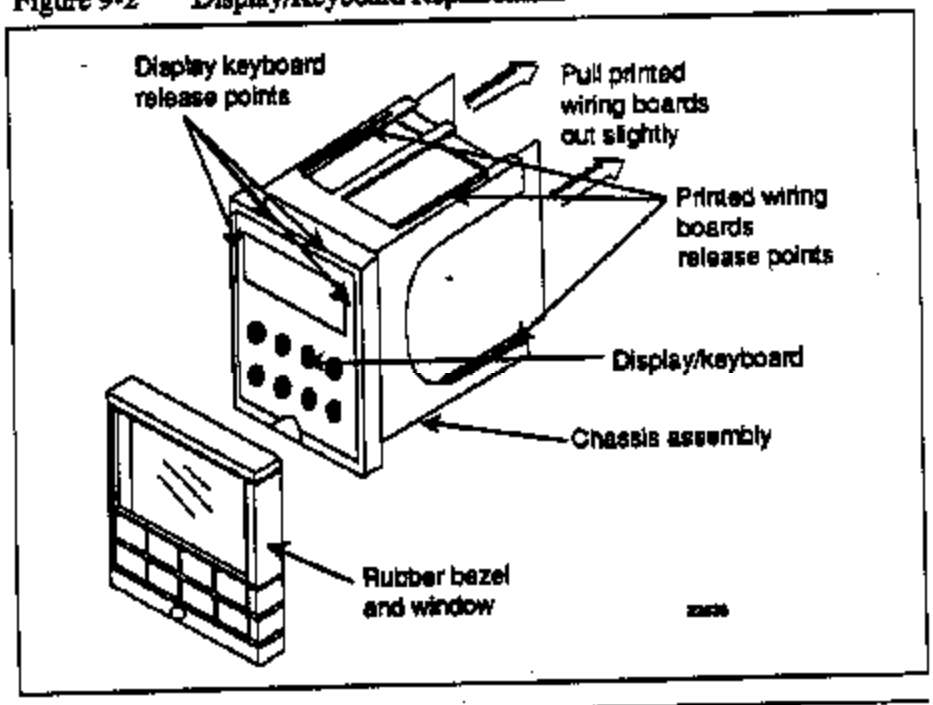

Continued on next page

How to remove the printed wiring boards from the chassis

To remove the printed wiring boards from the chassis, refer to Figure 9-3 and follow the procedure in Table 9-18.

Table 9-18 Printed Wiring Board Removal from Chassis

Step	Action
1	Remove the chassis from the case as shown in Figure 9-1.
2	Separate the chassis frame at the release points shown in Figure 9-3 and wiggle each printed wiring board out of its socket on the display/keyboard assembly. Pull both boards out of the chassis assembly.

Figure 9-3 Removing the Printed Wiring Boards

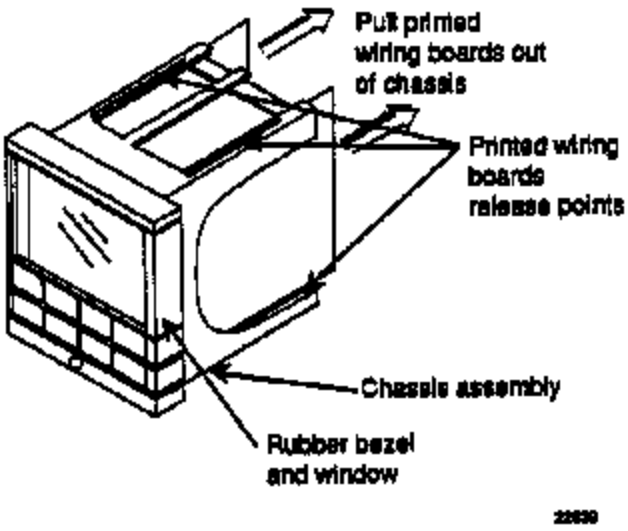

Continued on next page

Printed wiring board identification

Figure 9-4 identifies each of the printed wiring boards that can be replaced. Refer to this drawing when following the replacement procedures for each of the boards, since you have to remove all of them from the chassis to replace the one you want.

In order to lay boards flat, remove the transformer lead from the Aux.Out/Communications board and the Digital Input board.

Refer to the specific procedure table to remove the desired board.

- 2nd Input Board — Table 9-19
- Power Input Board — Table 9-20
- Digital Input Board — Table 9-21
- Aux.Out/Communications Board — Table 9-22
- MCU/Output Board — Table 9-23

Figure 9-4 Printed Wiring Board Identification

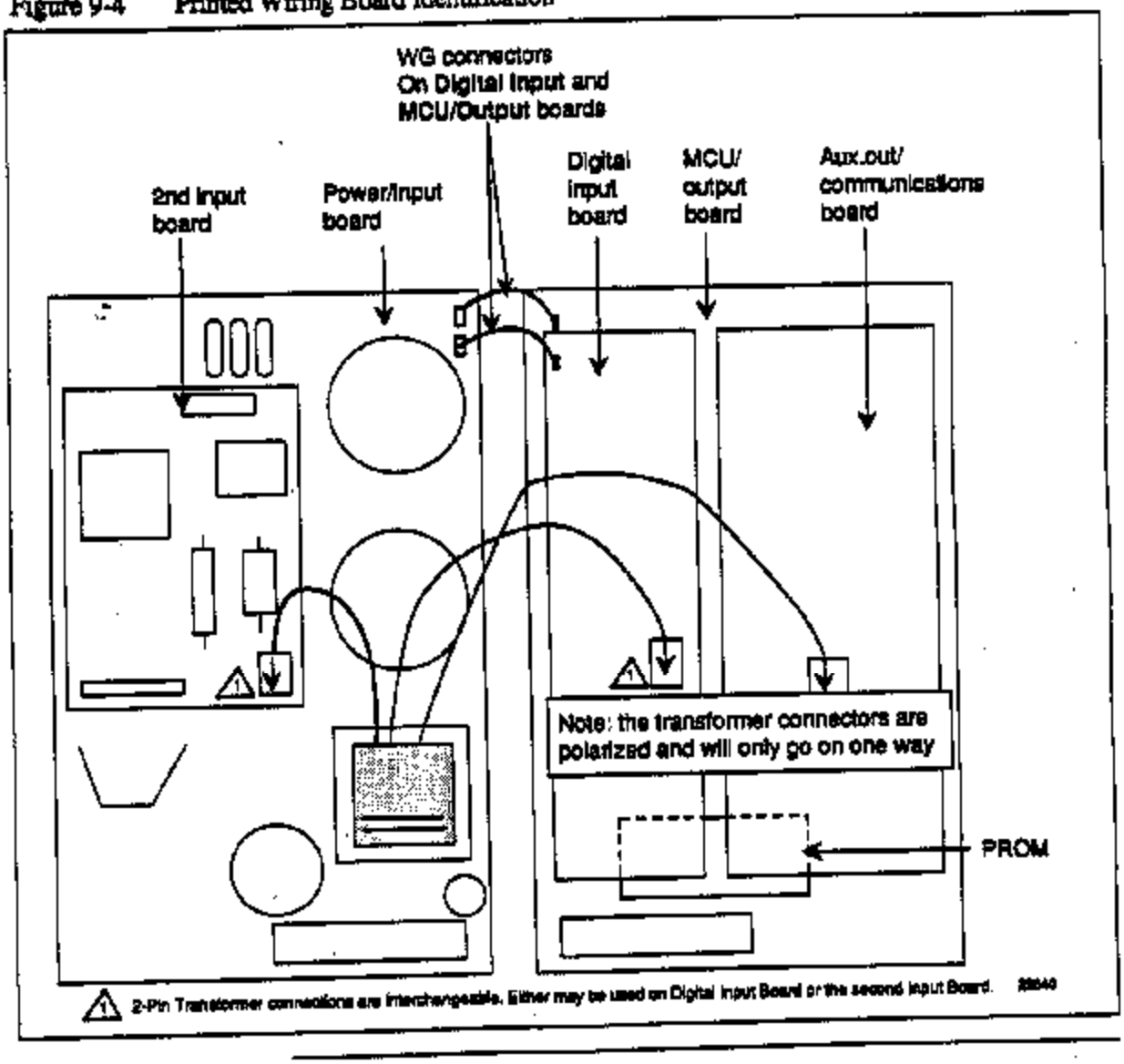

Continued on next page

2nd input board

Follow the procedure listed in Table 9-19 to replace the Second Input board—P/N 30756715-501.

Table 9-19 Second Input Board Replacement Procedure

Step	Action
1	Remove the chassis from the case. See Figure 9-1.
2	Remove the printed wiring boards from the chassis. See Figure 9-3.
3	Lay the boards flat and identify the 2nd input board. See Figure 9-4.
4	Remove the transformer plug from connector J14.
5	The 2nd input board is attached to the Power input board by three mounting posts. Locate these posts under the power input board.
6	Use a small pliers and squeeze the ends of each post together and push it up through the board. Remove 2nd input board.
7	Orient the new 2nd input board onto the Power input board and push the mounting posts down through the Power input board until they click into place.
8	Replace the transformer plug onto connector J14.
9	Slide the printed wiring boards back into the chassis. Make sure the connections to the display/keyboard assembly are made and that the release points on the chassis snap into place on the printed wiring boards.
10	Reinstall the chassis into the case. Push in hard, then tighten screw.

Continued on next page

Power Input board

Follow the procedure listed in Table 9-20 to replace the Power Input board—P/N 30756669-502(90 to 264Vac) or 30756669-503(24Vac/dc).

Table 9-20 Power Input Board Replacement Procedure

Step	Action
1	Remove the chassis from the case. See Figure 9-1.
2	Remove the printed wiring boards from the chassis. See Figure 9-3.
3	Lay the boards flat and identify the Power Input board. See Figure 9-4.
4	Remove the 2nd Input board, if present. See procedure in Table 9-19.
5	Remove the transformer connections to the Digital Input board and Aux.Out/Communications board, if present.
6	Remove the connector from plug WG if present (current output models only). Slide a small screwdriver under the connector and lift the release.
7	Replace the Power Input board.
8	Reinstall WG connector and transformer connections to Digital Input board and Aux.Out/Communications board, if present.
9	Reinstall the 2nd Input board. See procedure in Table 9-19.
10	Slide the printed wiring boards back into the chassis. Make sure the connections to the display/keyboard assembly are made and that the release points on the chassis snap into place on the printed wiring boards.
11	Reinstall the chassis into the case. Push in hard, then tighten screw.

Continued on next page

Digital input board

Follow the procedure listed in Table 9-21 to replace the Digital Input board—P/N 30756696-501.

Table 9-21 Digital Input Board Replacement Procedure

Step	Action
1	Remove the chassis from the case. See Figure 9-1.
2	Remove the printed wiring boards from the chassis. See Figure 9-3.
3	Lay the boards flat and identify the Digital Input board. See Figure 9-4.
4	Remove the transformer plug from connector J9.
5	The Digital Input board is attached to the MCU/output board by three mounting posts. Locate these posts under the MCU/output board.
6	Use small pliers and squeeze the ends of each post together and push it up through the board. Remove the Digital Input board.
7	Orient the new Digital Input board onto the MCU/Output board and push the mounting posts down through the MCU/Output board until they click into place.
8	Replace the transformer plug onto connector J9.
9	Slide the printed wiring boards back into the chassis. Make sure the connections to the display/keyboard assembly are made and that the release points on the chassis snap into place on the printed wiring boards.
10	Reinstall the chassis into the case. Push in hard, then tighten the screw.

Continued on next page

Aux.Out/ communications board

Follow the procedure listed in Table 9-22 to replace the following boards:

- Auxiliary Output Board—P/N 30756687-501
- DMCS Communications Board—P/N 30756690-501
- RS422/485 Communications Board—P/N 30756693-501

Table 9-22 Aux.Out/Communications Board Replacement Procedure

Step	Action
1	Remove the chassis from the case. See Figure 9-1.
2	Remove the printed wiring boards from the chassis. See Figure 9-3.
3	Lay the boards flat and identify the Auxiliary Output or the Communications board. See Figure 9-4.
4	Remove the transformer plug from connector J8.
5	The Aux.Out/Communications board is attached to the MCU/Output board by three mounting posts. Locate these posts under the MCU/Output board.
6	Use small pliers and squeeze the ends of each post together and push it up through the board. Remove the Aux.Out/Communications board.
7	If you are replacing a Communications Board, a new PROM is supplied with the board. Locate the PROM (shown in Figure 9-4) and gently pry out the old PROM. Orient the new PROM supplied and gently press into place.
8	Orient the new Aux.Out/Communications board onto the MCU/Output board and push the mounting posts down through the MCU/Output board until they click into place.
9	Replace the transformer plug onto connector J8.
10	Slide the printed wiring boards back into the chassis. Make sure the connections to the keyboard assembly are made and that the release points on the chassis snap into place on the printed wiring boards.
11	Reinstall the chassis into the case. Push in hard, then tighten the screw.

Continued on next page

MCU/output board

Follow the procedure listed in Table 9-23 to replace the following MCU/output boards:

- Current Output—P/N 30756718-502
- Relay Output—P/N 30756718-503

Table 9-23 MCU/Output Board Replacement Procedure

Step	Action
1	Remove the chassis from the case. See Figure 9-1.
2	Remove the printed wiring boards from the chassis. See Figure 9-3.
3	Lay the boards flat and identify the MCU/Output board. See Figure 9-4.
4	Each option board is held onto the MCU/Output board with three posts.. Locate these posts under the MCU/Output board.
5	Use small pliers and squeeze the ends of each post together and push it up through the board. Remove the option boards present.
6	Remove the transformer connections to the Digital Input board and the Aux.Out/Communications board, if present.
7	Remove the Digital Input Board, if present. See Table 9-21.
8	Remove the Aux.Out/Communications board, if present. See Table 9-22.
9	Remove the connector from plug WG. Slide a small screwdriver under the connector and lift the release.
10	Replace the MCU/Output board.
11	Reinstall the Digital Input board, if present, onto the new MCU/Output board.
12	Reinstall the Aux.Out/Communications board, if present, onto the new MCU/Output board.
13	Reinstall the WG connector and the transformer connectors to the Digital Input board and Aux.Out/Communications board, if present.
14	Slide the printed wiring boards back into the chassis. Make sure the connections to the display/keyboard assembly are made and that the release points on the chassis snap into place on the printed wiring boards.
15	Reinstall the chassis into the case. Push in hard, then tighten the screw.

9.9 Maintenance

Cleaning

If you find it necessary to clean the elastomer bezel, use mild soapy water.

Section 10 – Parts List

10.1 Exploded View

Introduction

Figure 10-1 is an exploded view of the UDC 3000 Controller. Each part is labeled with a key number. The part numbers are listed by key number in Table 10-1. There is a list of parts not shown in Table 10-2.

Figure 10-1 UDC 3000 Exploded View

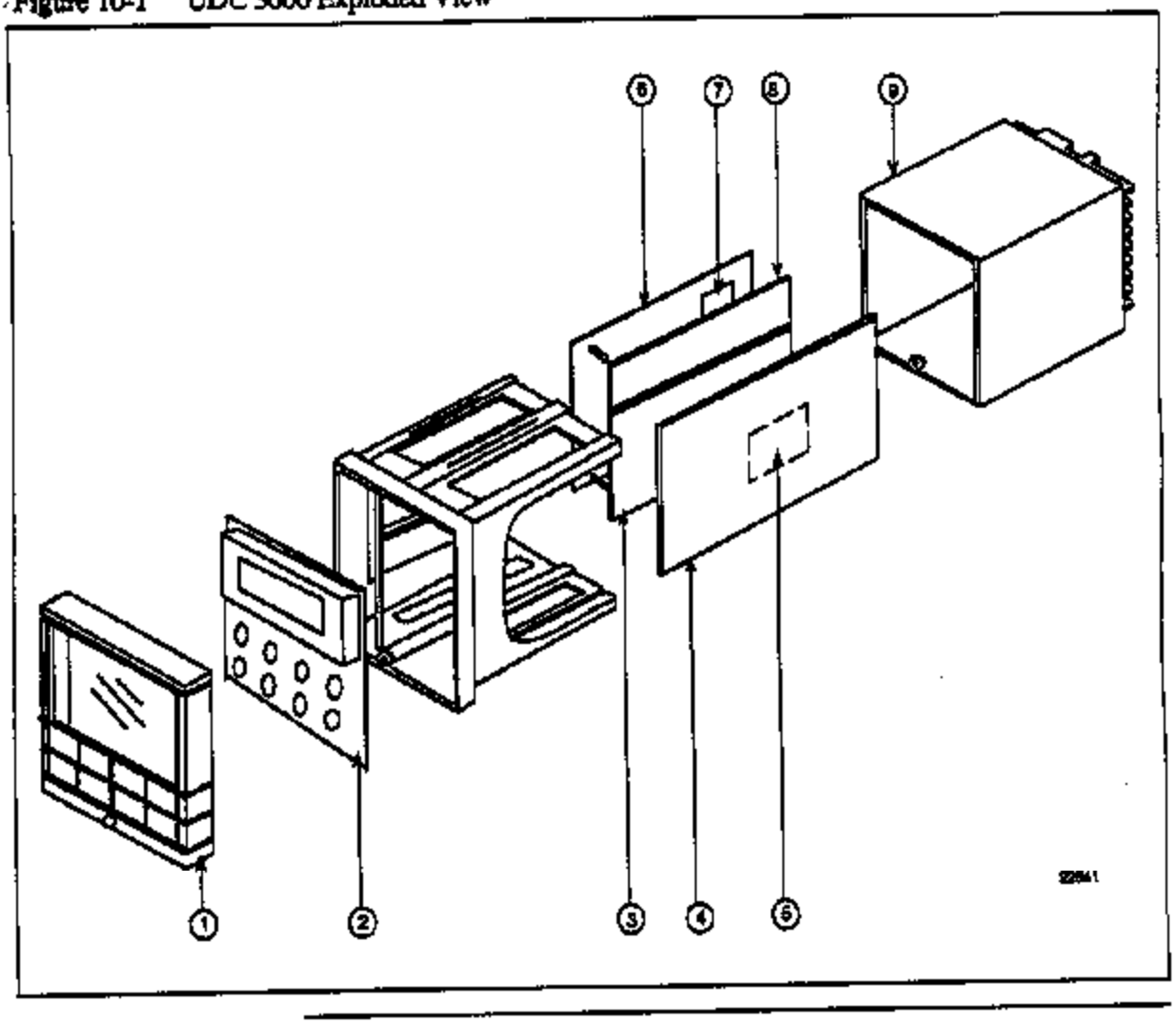

Continued on next page

Parts Identification

Table 10-1 lists the part numbers for the key numbers shown in the exploded view.

Table 10-1 Parts Identification

Key Number	Part Number	Description	Quantity
1	30756667-501	Bezel Assembly - Gray	1
2	30756672-501	Display/Keyboard Printed Wiring Assembly	1
3	30756687-501 30756690-501 30756693-501	Auxiliary Output Printed Wiring Board DMCS Communications Printed Wiring Board (includes new PROM) RS422/485 Communications Printed Wiring Board (includes new PROM)	1
4	30756669-502 30756689-503	Power/Input Printed Wiring Board 90-264Vac Power/Input Printed Wiring Board 24Vac/dc	1
5	30756715-501	2nd Input Printed Wiring Board	1
6	30756718-502 30756718-503	Current Output MCU/Output Printed Wiring Board Relay Output MCU/Output printed Wiring Board	1
7	30755308-501 30756725-501 30756679-501	Relay, Electromechanical Relay, Solid State 1 Amp Open Collector Output Printed Wiring Jumper	1 per kit
8	30756696-501	Digital Input Printed Wiring Board	1
9	30756721-501	Case Assembly	1

Continued on next page

Parts not shown

Table 10-2 lists the part numbers of the parts not show in the exploded view.

Table 10-2 Parts Not Shown

Part Number	Description	Quantity
30731996-506	4-20 mA Resistor Assembly, 250 Ohms	1
30754465-501	0-10 Volt Input Resistor Assembly, 100K Pair	1
30752481-501 30752481-502	Varistor, 120V Varistor, 240V	1
30755050-001	Mounting Kit	1
30756746-501	Snubber Assembly	1
30756764-002	Rear Cover Kit	1
30755223-002 30755223-003	DIN Adapter Kit, Blue DIN Adapter Kit, Gray	1
30756774-501	Adaptive Tune Prom Upgrade	1
30756775-501	Adaptive Tune/Setpoint Programming Prom Upgrade	1
30757086-501	Cold Junction Resistor Kit	1
30756018-003	External Relay, Solid State 10 Amp	1
30756682-501	Adapter (New chassis to old case)	1
30756683-001	NEMA3 Gasket (Panel to case)	
30757215-001	NEMA4 Front Face Kit	1

Section 11 – Appendix A – Manual Tuning

11.1 Overview

Introduction

When you tune a controller, there are some things to consider:

- Process Characteristics - Gain, Time Constants, etc.
- Desired response - Minimal overshoot

Basically, controller tuning consists of determining the appropriate values for the Gain (PB), Rate (Derivative), and Reset (Integral) time tuning parameters (control constants) that will give the control you want. Depending on the characteristics of the deviation of the process variable from the setpoint, the tuning parameters interact to alter the controller's output and produce changes in the value of the process variable.

Since each parameter responds to a specific characteristic of the deviation, you may not need a combination of all three. It depends on the process characteristics and the desired control response.

Tuning technique

You can estimate a starting point and the tuning parameters required to give the desired controller response and with some experience become proficient with this method.

An alternate approach is to rely on a tuning technique. In practice, tuning techniques usually do not give exactly the type of response desired; thus, some final adjustments to the tuning parameters must be made.

However, you should at least obtain a reasonable starting point from which the desired response characteristics can be obtained.

Controller tuning procedures

There are three procedures for tuning the controller:

- Time, Position, or Current Proportional simplex control,
- Duplex Time or Current Proportional control,
- Two sets of tuning constants for single output operation.

The suggested procedures describe how to establish and store values of Gain (PB), Rate, and Reset time constants for your process. You must know the type of control and algorithm your controller has.

Tuning aids

A graphic recorder (such as Honeywell model DPR, DR4500, or VP131) connected to the process variable will make it easier to determine when the oscillations are constant and also the time for one oscillation. If a recorder is not available, you can use a stop watch to time the oscillation of the process variable displayed on the controller.

11.2 Time, Position, or Current Proportional Simplex Control

Procedure

The procedure listed in table 11-1 gives you the steps for manually tuning a controller with Time, Position, or Current proportional simplex control.

Table 11-1 Manual Tuning Procedure for Simplex Control

Step	Action
1	In Manual Mode, adjust the output to bring the PV (Process Variable) near the desired value.
2	Set the Rate time to 0 minutes and set the Reset time to the maximum value (50.00 minutes) or set repeats/min to the minimum value to minimize reset action If applicable, set the CYCLE TIME to 4 seconds and DEADBAND to 0.5.
3	Increase GAIN (decrease PB) significantly. Try a factor of 10.
4	Adjust the local setpoint to equal PV and switch to Automatic control mode.
5	Increase the setpoint by 5 or 10% and observe the process variable response.
6	If the PV oscillates, continue to step 7. If it does not oscillate, return to the original setpoint and increase GAIN (decrease PB) again by a factor of 2, and repeat step 5.
7	Compare the oscillations with the figure below: 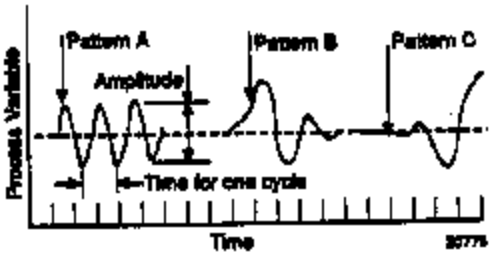 • If the oscillation matches pattern A, go to step 8. • If the oscillation matches pattern B, increase GAIN (decrease PB) by a factor of 2 and repeat steps 4 to 6. • If the oscillation matches pattern C, decrease GAIN (increase PB) by a factor of 0.5 and repeat steps 4 to 6 The amplitude of the cycle is immaterial, but all of the elements of the loop must be within the operating range (i.e., the valve must not go full open or closed).
8	Record the current value of GAIN (or PB) and measure and record the value of time for one completed oscillation of PV.

Continued on next page

Procedure, continued

Table 11-1 Manual Tuning Procedure for Simplex Control, continued

Step	Action
9	Select the proper set of formulas from Table 11-2. Use the values of Gain (or PB) and time (in minutes) in the formulas to arrive at the controller's tuning parameters settings.
10	Enter the values of GAIN (or PB), RATE, and RESET in minutes (or repeats per minute) into the UDC 3000 controller and verify that the PV response is adequate. Make additional trimming adjustments, if necessary, to fine tune the controller per the guidelines shown below: TO REDUCE OVERSHOOT Less Gain (more PB) perhaps a longer Rate time. TO INCREASE OVERSHOOT OR INCREASE SPEED OR RESPONSE More Gain (less PB), perhaps shorter Rate time.

Manual tuning formulas Table 11-2 lists the formulas used in the procedure listed in Table 11-1.

Table 11-2 Manual Tuning Formulas

	Units	
	GAIN and RESET TIME in Minutes / Repeat	% PROPORTIONAL BAND and RESET ACTION in Repeats / Minutes
Proportional (P) only Use PD+MR Algorithm (i.e. No Reset)	GAIN = Measured Gain x 0.5 RESET TIME = 50.00 (minimum reset) RATE = 0	%PB = Measured PB x 2 RESET ACTION = 0.02 (repeats/minute) RATE = 0
Proportional + Reset (PI) (No Rate)	GAIN = Measured Gain x 0.5 RESET TIME = $\frac{\text{Measured Time}}{1.2}$ (M/R) RATE = 0	%PB = Measured PB x 2.2 RESET ACTION = $\frac{1.2}{\text{Measured Time}}$ (R/M) RATE = 0
Proportional + Reset + Rate (PID)	GAIN = Measured Gain x 0.8 RESET TIME = $\frac{\text{Measured Time}}{2}$ RATE = $\frac{\text{Measured Time}}{8}$	%PB = Measured PB x 1.7 RESET ACTION = $\frac{2}{\text{Measured Time}}$ RATE = $\frac{\text{Measured Time}}{8}$

11.3 Time Proportional Duplex or Current Proportional Duplex Control

Introduction

For HEAT/COOL applications.
Tune the controller with the output above 50% for Heat and below 50% for Cool.

HEAT/COOL prompts

The "TUNING" function prompts for HEAT/COOL are:

HEAT	COOL
PB or GAIN	GAIN2
RSETMIN or RSETRPM	RSET2MIN or RSETRPM2
RATEMIN	RATE2MIN
CYCSEC	CYC2SEC

11.4 Two Sets of Tuning Parameters for Single Output Operation

Introduction

You can use two sets of tuning constants for single output types and tune each set seperately.

TWO SETS prompts

The "TUNING" function prompts for two sets are:

PID SET 1	PID SET 2
PB or GAIN	GAIN2
RSETMIN or RSETRPM	RSET2MIN or RSETRPM2
RATEMIN	RATE2MIN
CYCSEC	CYC2SEC

Section 12 - Appendix B

How to Apply Digital Instrumentation in Severe Electrical Noise Environments

12.1 Overview

Guideline overview

Products that incorporate digital technology provide recognized performance advantages over conventional analog instrumentation used for process control. These advantages can result in better product uniformity and greater overall efficiency when used correctly.

There are, however, certain guidelines regarding installation and wiring which must be carefully followed in order to achieve this performance. In addition to the traditional precaution of the separation of signal and power wiring in separate conduits, other measures must be taken to minimize the effects of electromagnetic interference (EMI) and radio frequency interference (RFI) on the operation of the equipment. Otherwise, if high level, short duration, noise spikes are permitted to enter the digital equipment, the noise can be transferred into the system's logic networks and can be misinterpreted as signal data, resulting in erroneous system operation and other unpredictable responses.

What's in this section

This section contains the following information:

Topic	See Page
12.1 Overview	197
12.2 Potential Noise Sources	198
12.3 Prevention Methods	199
12.4 Recommended Wiring Practices	200
12.5 Power Source Considerations	202
12.6 Noise Suppression at the Source	203

12.2 Potential Noise Sources

Overview

Noise can enter electronic equipment via three methods of coupling, namely:

- Capacitive (or electrostatic)
- Inductive (or magnetic)
- Impedance.

Capacitive and inductive coupling

Capacitive and inductive coupling have the same essential effect — they couple current or voltage, without any actual connection of the two circuits. Impedance coupling requires a connection between the two circuits. Typical noise-generating sources that could affect electronic equipment through capacitive and inductive coupling include:

- Relay coils
- Solenoids
- AC power wires — particularly at or above 100 Vac
- Current carrying cables
- Thyristor field exciters
- Radio frequency transmissions.

Impedance coupled noise

Impedance-coupled noise may enter by way of the lines used to power the digital equipment or by way of improper grounding. Most power lines, at typical industrial locations, are far from noise-free. The noise on them can be generated in many ways, but are nearly always associated with switching circuits of some nature.

These include:

- Large relays
- Contactors
- Motor starters
- Business and industrial machines
- Power tools
- HID (high intensity discharge) lights
- Silicon controlled rectifiers (SCRs) that are phase-angled fired.

12.3 Prevention Methods

Introduction

There are three ways to prevent electrical noise from interfering with the operation of the electronic digital equipment.

- Built-in noise rejection
- Separation of signal and power lines
- Noise suppression at source

Built-in noise rejection

The first method is to design the digital equipment with a high degree of noise rejection built-in. This includes housing the equipment in a case that will provide shielding, liberal use of noise rejection filters and opto-isolators, and the use of noise suppressors on potential noise sources within the equipment itself. This, of course, is the responsibility of the manufacturer who usually performs extensive laboratory and field testing of newly designed digital equipment to insure the adequacy of its immunity to noise. As a minimum requirement, the equipment should be able to pass the tests outlined in the IEEE Standard 472-1974 *(Surge Withstand Capacity Tests)*.

Signal and power line separation

The second method is to prevent noise from getting on the signal and power lines that are connected to the equipment. This is achieved by proper separation and shielding of those lines. In some cases, separate power lines or special power line regulation or filtering may be required for satisfactory electronic digital equipment operation. It is the responsibility of the installer to follow good wiring practices.

Suppression at the source

The third prevention method is to suppress the noise at its source. This is the most effective but also the most difficult because it is not easy to identify all of the potential noise sources in a typical industrial installation. Therefore, "suppression" is usually a last resort for those extreme situations where the other methods are insufficient by themselves. See *Noise Suppression at Source* which follows.

12.4 Recommended Wiring Practices

General rules

- All wiring must conform to local codes and practices.
- Wires carrying similar types of signals (Table 12-1) may be bundled together, but bundles with different types of signals must be kept separated to prevent inductive or capacitive coupling.

Wire bundling

Table 12-1 shows what wiring should be bundled together to prevent inductive or capacitive coupling.

Table 12-1 External Wiring

Wire Function		Bundle No.	Are Shielded Twisted Wires Recommended?
No.	Type		
	HIGH VOLTAGE	1	NO
1	Line Power		
2	Earth Ground		
3	Line Voltage		
	Digital I/O		
	ANALOG I/O	2	YES
4	Process Variable		
	RTD		
	Thermocouple		
	dc Millivolts		
5	Low level (<100V)		
	4-20 mA dc		
	1-5 Vdc		
	DIGITAL I/O	3	YES
6	Low Voltage (<100V)		
7	Computer interface		

Continued on next page

Additional rules

Please observe these additional rules for wire bundling:

- For distances over five (5) feet, and when shielding is recommended, use a separate metal tray or conduit for each bundle. Where conduits or trays are not practical, use twisted wires with a metal overbraid and provide physical separation of at least one foot.
- Tray covers must be in continuous contact with the side rails of the trays.
- When unlike signal levels must cross, either in trays or conduits, they should cross at a 90-degree angle and at a maximum spacing. Where it is not possible to provide spacing, a grounded steel barrier or grid should be placed between the unlike levels at the crossover points.
- Trays containing low level wiring should have solid bottoms and sides. Tray covers must be used for complete shielding. Tray cover contact with side rails must be positive and continuous to avoid high reluctance air gaps, which impair shielding. Trays for low level cables should be metal and solidly grounded.
- Wires containing low level signals should not be routed near any of the following:
  - Contactors
  - Motors
  - Generators
  - Radio transmitters
  - Wires carrying high current that is being switched on and off.
- Use a 12-gage (or heavier) insulated stranded wire for the ground connection. Attach it firmly to a proven good earth ground such as a metal stake driven into the ground.
- All shields should be grounded at one end only — preferably the instrument end.

12.5 Power Source Considerations

Operate within limits

The AC power for the digital electronic equipment must be within the voltage and frequency limits specified for that equipment. Attempts to operate outside the specified limits will result in no performance. For those installations where the supply voltage will not stay within the specified limits, a ferroresonant transformer, for voltage resolution, should be used.

Independent AC source

For protection against noise, the AC source for the digital electronic equipment should be independent of all other loads especially when switching loads are involved. For example, it should not provide power for air-conditioning, convenience outlets, lighting, motors, or similar noise-generating devices. To obtain electrical isolation (see Figure 12-1) a separate transformer is required to supply power to the digital equipment. For additional noise and transient rejection, shielded primary and secondary windings may be required. And, if necessary, power line filters may be added to attenuate noise signals that have a higher frequency than the power line frequency.

Transformer for digital equipment

Figure 12-1 is an illustration of a separate transformer required to supply power to digital equipment.

Figure 12-1 Transformer for Digital Equipment

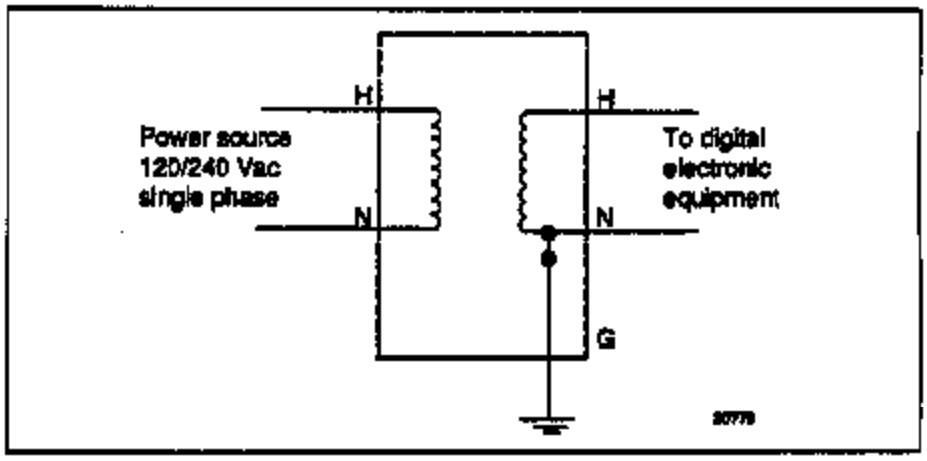

12.6 Noise Suppression at the Source

Introduction

Generally speaking, when good wiring practices are used with well-designed digital electronic equipment, no further noise protection is necessary. However, in some severe electrical environments, the magnitude of the electrical noise is so great that it must be suppressed at the source. In most control cabinets, the main sources of noise are motor starters, contactors, relays, and switching gear. For this reason, many manufacturers of these devices supply "surge suppressors" which mount directly on the noise source, (for example, on the coil of a control relay or motor starter).

For those devices that do not have accessory "surge suppressors," resistance-capacitance (RC) circuits and/or voltage limiters such as metal varistors may be added when and where needed. This can be broken down into two categories, namely inductive loads (for example, a relay switch in series with a relay coil) and contacts.

Inductive coils

Metal Oxide Varistors (MOVs) are recommended for transient suppression in inductive coils. An MOV is connected in parallel with the coil and is as close as physically possible to the coil (see Figure 12-2). MOV devices (listed in Table 12-2) are recommended for general purpose applications.

Table 12-2 lists part numbers for recommended MOV devices.

Table 12-2 MOV Devices

Part Number	30752441-501	30752441-502
Maximum AC	130V	275V
Energy Pulse Rating	10 Joules	15 Joules
Supplier (General Electric)	V130LA10A	V275LA15A

Continued on next page

Inductive coils, continued

Figure 12-2 is an illustration of transient suppression in inductive coils.

Figure 12-2 Transient Suppression in Inductive Coils

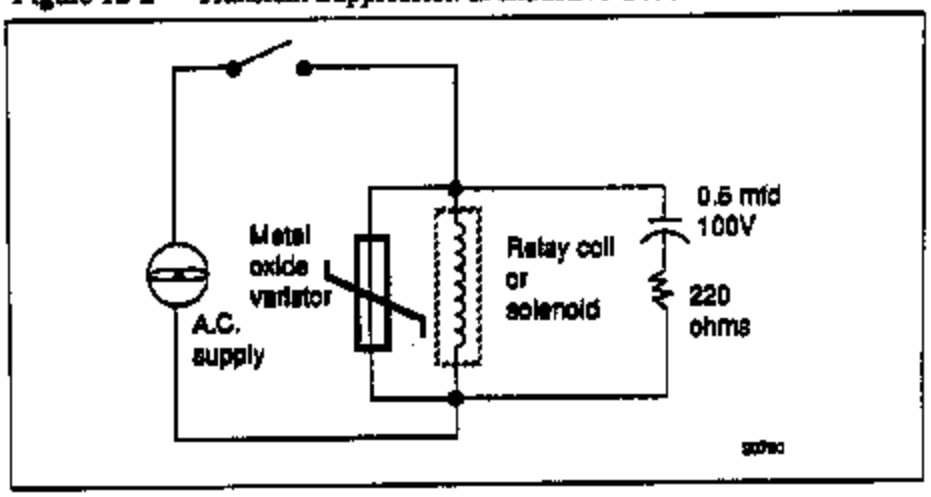

Additional protection may be provided by adding an RC circuit in parallel with the MOV. This consists of a 220-ohm resistor in series with a 0.5 microfarad, 1000V capacitor. The power rating of the resistor will depend on the voltage rating of the coil (see Table 12-3).

Table 12-3 Coil Voltage vs Resistor Voltage Rating

Coil Voltage	Resistor Voltage Rating
115V	1/4 Watt
230V	1 Watt
460V	3 Watt
550V	5 Watt

Continued on next page

Contacts

When a contact interrupts an inductive load, a certain amount of energy is stored in the load. An MOV or RC circuit in parallel with the load provides a place where this energy may be dissipated. However, if there is no MOV or RC circuit, the energy may create a visible electrical arc across the open contacts. This, in turn, results in electrical noise as well as damage to the contacts.

One way to eliminate this arc is to connect a resistor and capacitor across the contacts (see Figure 12-3). A combination of 47 ohms and 0.1 microfarads (1000 Vdc) is recommended for circuits up to 3 amps and 300 Vac. For voltages above 2000 Vac, an MOV across the contact may be added for extra protection.

Figure 12-3 is an illustration of a resistor and capacitor connected across a contact to eliminate electrical noise.

Figure 12-3 Contact Noise Suppression

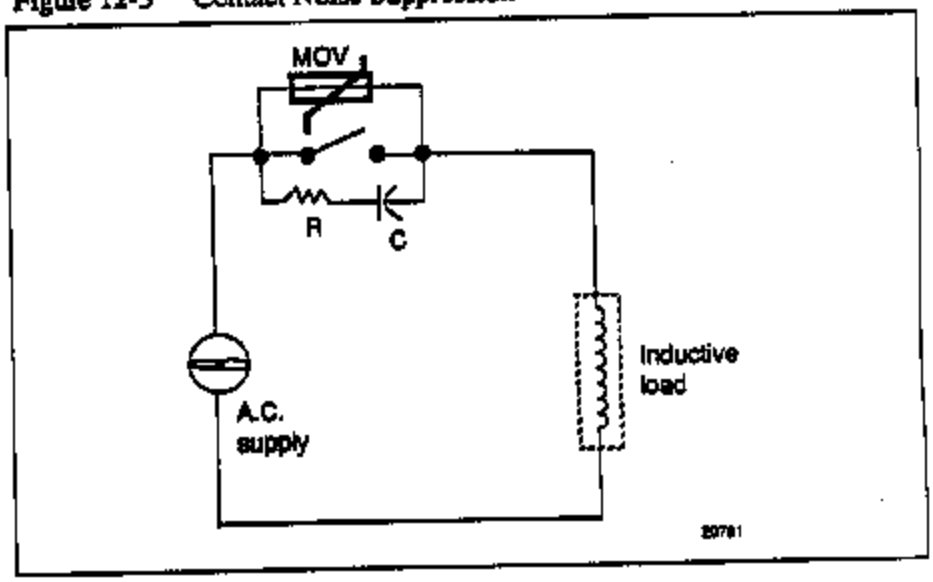

For large load currents, a rule of thumb is to size the capacitor so that the number of microfarads equals the number of amperes in the load current, and the resistor has the same resistance value as the load. The objective is to eliminate the visible arc.

Either discreet resistors and capacitors or packaged RC networks may be used. An RC network (47 ohms and 0.1 microfarad) is available from Honeywell as part number 30756746-001. Similar RC networks are available from Electrocube Inc. (part number RG1782-3) and from Industrial Condensor Corporation.

Continued on next page

Contacts, continued

In DC circuits, the power dissipation under steady state condition can be eliminated by placing a diode (in series with a resistor) in parallel with the load (see Figure 12-4). The value of R should be less than or equal to the DC resistance of the inductive load.

Figure 12-4 is an illustration of DC load noise suppression.

Figure 12-4 DC Load Noise Suppression

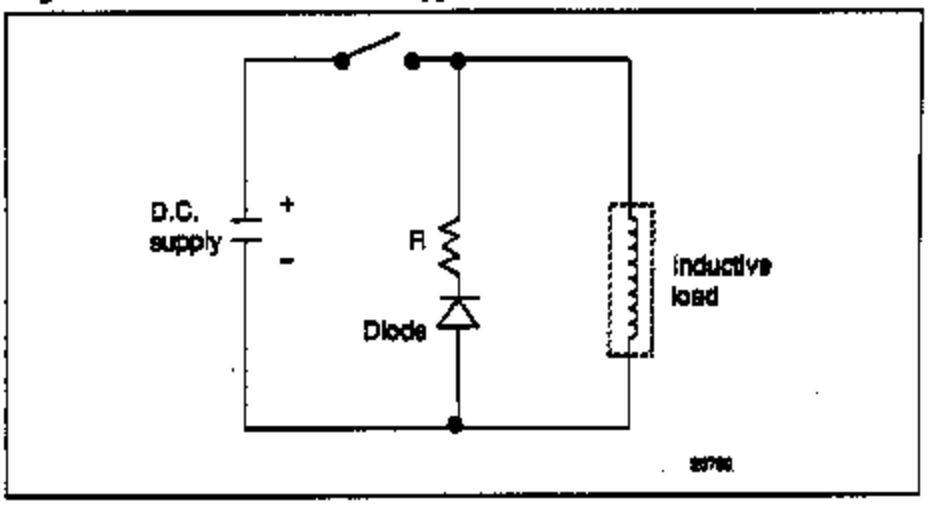

Index

A

+CONF, *57*
+VIEW, *57*
Adaptive Tune, *59*
Adaptive Tune Error Codes, *119*
Adaptive Tune Error Status, *60*
Auto Manual Station mode: backup control feature, *110*
Auto/Manual Station mode, *110*
Automatic Mode, *94*
Automatic switchover value, *72*
Aux.Out/Communications Board Replacement Procedure, *185*
Auxiliary output, *76*
Auxiliary Output Board, *185*
Auxiliary output connections, *21*
Auxiliary output high scaling factor, *77*
Auxiliary output low scaling factor, *77*

B

Baud rate, *79*
Bias, *67*, *72*
Burnout protection, *68*

C

CALIB, *57*
Capacitive and inductive coupling, *198*
CE Conformity, *1*, *6*
Chassis Removal, *178*
Cleaning, *187*
Coil voltage vs resistor voltage, *204*
Communication units, *80*
Communications option connections, *23*
Communications selection, *79*
Communications station address, *79*
Composite wiring diagram, *12*
Configuration, *29*
Configuration Prompt Definitions, *53*
Contact Noise Suppression, *205*
Control algorithm, *61*
Control output direction, *74*
Controller dropoff value, *74*
Controller failure symptoms, *162*
Current output connections, *19*
Current proportional duplex, *196*
Cycle time, *56*
Cycle time 2, *56*

D

DC Load Noise Suppression, *206*
Deadband, *75*
Decimal point location, *65*
Diagnostic error messages, *91*
Digital Input Board Replacement Procedure, *184*
Digital input combinations, *78*
Digital input selections, *77*
Digital inputs connections, *22*
Dimensions, *8*
Direct acting control, *74*
Display/keyboard assembly, *179*
Displays and indicators, *2*
DMCS Communications Board, *185*
Duplex, *80*, *81*

E

Electrical considerations, *10*
Electrical isolation, *202*
Electrical noise, *10*, *197*
Electromagnetic interference, *197*
Electromechanical Relay Output., *16*
Emissivity, *68*
End segment number, *122*
Error messages, *161*
External program reset, *78*, *130*

F

Failsafe output value, *75*
Filter, *68*
Filter for Input 2, *70*
Function of keys, *3*

G

Gain, *55*
Gain 2, *56*
Grounding, *10*
Guaranteed Soak, *123*

H

High output limit, *74*
Hysteresis, *75*

I, J

Impedance coupled noise, *198*
Input 1 actuation type, *66*
Input 1 high range value, *67*
Input 1 low range value, *67*
Input 2 high range value, *70*
Input 2 low range value, *70*
Input Calibration, *133*
Installation, *5*;
Operating limits, *6*

K

Keys, *3*

L

Line voltage wiring, *13*
Local setpoint Change, *96*
Local setpoint source, *96*
Lockout, *57*
Loopback, *80*
Low output limit, *74*
Lower display key, *90*

M

Manual Mode, *94*
Manual reset, *56*
Manual Tuning, *193*
Manual tuning formulas, *195*
Manual tuning procedure, *194*
Manual/Auto key lockout, *57*
MAX, *57*
MCU/Output Board Replacement Procedure, *186*
Model number interpretation, *7*
Mounting: Overall dimensions, *8*
Mounting method, *9*
Mounting procedure, *9*

N

Noise, *197*
Noise rejection, *199*

O

ON/OFF, *61*
Open Collector OutputConnections, *18*
Operating limits, *6*
Operating parameters, *90*
Operation, *85*
Operator interface, *2*
Output algorithm, *63*
Output Calibration, *149*
Output change rate, *74*
Output rate down value, *74*
Output rate up value, *74*
Overview, *1*

P, Q

Parity, *79*
Parts Identification, *190*
Parts List, *189*
PD with Manual Reset, *62*
Physical considerations, *8*
PID A, *61*
PID B, *62*
Position Proportional Backup mode, *95*
Position Proportional control output calibration, *152*
Position proportional output connections, *20*
Power Input Board Replacement Procedure, *183*
Power line frequency, *68*
Power up, *86*
Power up controller mode recall, *73*
Power up preset automatic output, *75*
Power up preset manual output, *75*
Precision Resistor, *138*, *144*
Printed wiring board identification, *181*
Printed wiring board removal, *180*
Process gain, *59*
Program Record Sheet, *125*
Program state, *123*
Program termination state, *123*
Prompt hierarchy, *30*
Proportional band, *55*
Proportional band 2, *56*
Proportional band units, *75*
Protective bonding, *10*

R

Radio frequency interference, *197*
Ramp segments, *122*
Ramp unit, *123*
Ramp/Soak Profile example, *124*
Rate 2, *56*
Rate action, *55*
Rate down, *58*
Rate up, *58*
Ratio, *72*
Recycle number, *122*
Relay Output, *16*
Relay type, *64*
Remote setpoint, *72*, *97*
Remote switching, *108*
Reset, *56*
Reset 2, *56*
Reset units, *75*
Reverse acting control, *74*
RS422/485 Communications Board, *185*
Run/Hold key, *57*

S

Second Input Board Replacement Procedure, *182*
Security code, *57*, *88*
Setpoint high limit, *73*
Setpoint low limit, *74*
Setpoint Program Data Entry Procedure, *126*
Setpoint Ramp: Configuring, *100*; Running, *101*
Setpoint ramp final setpoint, *58*
Setpoint ramp function, *58*
Setpoint ramp time, *58*
Setpoint Ramp/Soak Programming Option, *121*
Setpoint rate, *58*
Setpoint Select key lockout, *57*
Setpoint selection indication, *98*
Setpoint source, *72*
Setpoint tracking, *73*
Shed controller mode and output level, *80*
Shed setpoint, *80*
Shed time, *79*
Shock hazard warning, *133*, *149*, *169*
Signal and power line separation, *199*
Soak segments, *122*
Software version, *162*
Solid State Relay Output Connections, *17*
Start segment number, *122*
Suppression at the source, *199*
Surge suppressors, *203*
Switch-over value, *104*

T

Technical Assistance, *iii*
Temperature units, *65*
Three position step, *62*
Three Position Step Output Calibration, *152*
Timer, *54*
Timer parameters, *36*
Transformer for Digital Equipment, *202*
Transient Suppression in Inductive Coils, *204*
Transmitter characterization, *67*
Troubleshooting / Service, *159*
Timing parameter sets, *71*

U

UDC 3000 Exploded View, *189*

V

+VIEW *57*

W, X, Y, Z

WARNING—SHOCK HAZARD, *133*, *149*, *169*
Wire bundling, *11*, *200*
Wiring: electrical noise precautions, *10*; wire bundling, *11*; Wiring the controller, *11*
Wiring diagram, *12*
Wiring Diagrams: Relay output, *16*

READER COMMENTS

Honeywell's IAC Automation College welcomes your comments and suggestions to improve future editions of this and other publications.

You can communicate your thoughts to us either by mail using this form, or a toll-free telephone call.

BY TELEPHONE: In the U.S.A. use our toll-free number 1*800-822-7673 (available in the 48 contiguous states except Arizona; in Arizona dial 1-602-863-5558).

BY MAIL: Use this form; detach, fold, tape closed, and mail to us. We would like to acknowledge your comments; please include your complete name and address.

Title of Publication: UDC 3000 Controller Product Manual

Publication Number: 51-52-25-07E Issue Date: 10/95

Writer: Dan O'Connor

COMMENTS: _____

RECOMMENDATIONS: _____

NAME _____ DATE _____

TITLE _____

COMPANY _____

ADDRESS _____

CITY _____ STATE _____ ZIP _____

(If returning by mail, please tape closed; Postal regulations prohibit use of staples.)

Communications concerning technical publications should be directed to:

Automation College
Industrial Automation and Control
Honeywell Inc.
2820 West Kelton Lane
Phoenix, Arizona 85023

FOLD

FOLD

From: _____

NO POSTAGE NECESSARY IF MAILED IN THE USA

BUSINESS REPLY MAIL

FIRST CLASS PERMIT NO. 4332 PHOENIX, ARIZONA

POSTAGE WILL BE PAID BY ...

Honeywell

Industrial Automation and Control
2820 West Kelton Lane
Phoenix, Arizona 85023

Attention: Manager, Quality

FOLD

FOLD

Cut Alon

Additional Comments: